HK 31.5

Simulation studies for the measurement of $\bar{p}p \rightarrow e^+e^-\pi^0$ with the $\bar{P}$ANDA detector at FAIR

María Carmen Mora Espí *

Institut für Kernphysik, Johannes Gutenberg Universität - Mainz

* moraespi@kph.uni-mainz.de

DPG – Münster 2011
Session: HK 31.5

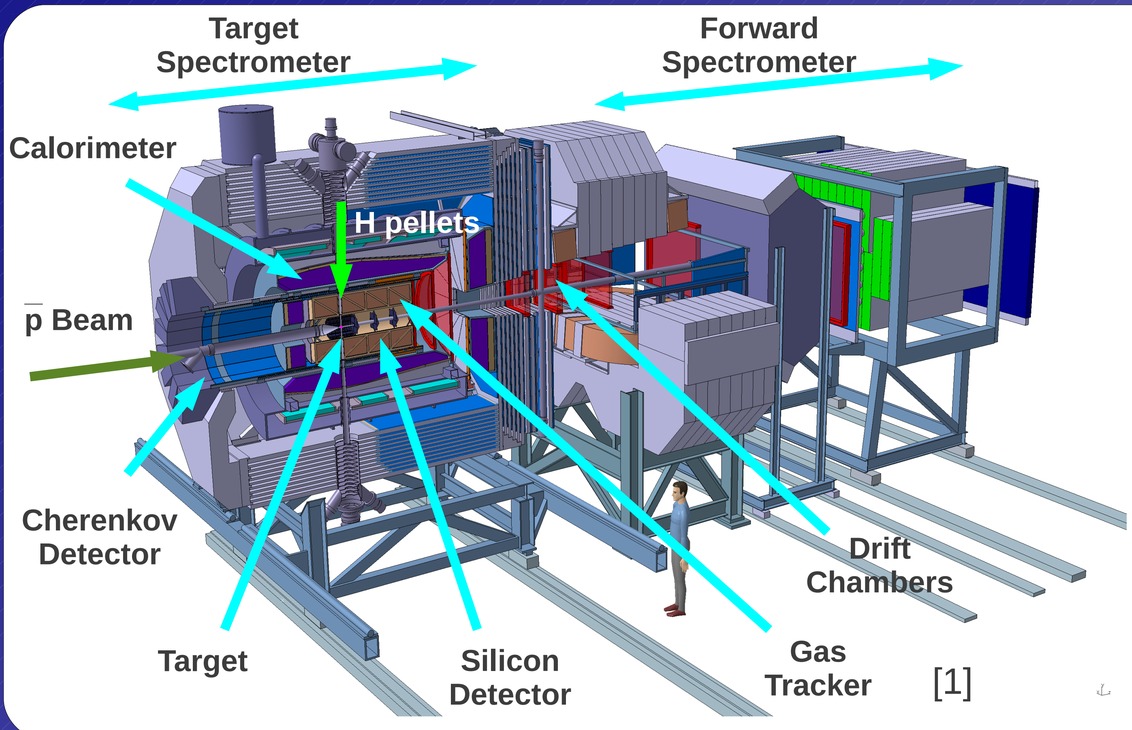

PANDA at FAIR

- High Luminosity: $L = 2 \cdot 10^{32}\ cm^{-2}s^{-1}$
- Good tracking system
- Good PID capabilities

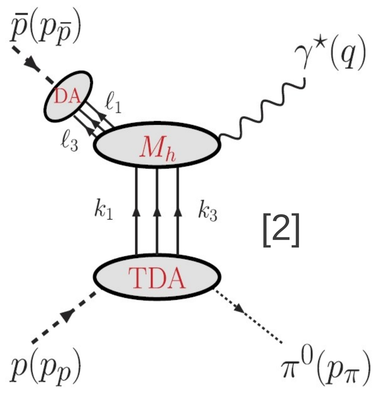

Study of the TDA's for the forward and backward limit of the π^0 can be done with $\bar{P}$ANDA.

Few hundred events are expected for $W^2 = 5\ GeV^2$ and $W^2 = 10\ GeV^2$

The main background channel is $\bar{p}p \rightarrow \pi^+\pi^-\pi^0$

$\bar{p}p \rightarrow e^+e^-\pi^0$ and $\bar{p}p \rightarrow \pi^+\pi^-\pi^0$ simulation

- 30,000 events for signal simulations at $W^2 = 5\ GeV^2$ and $W^2 = 10\ GeV^2$ considering π^0 produced at 180º or 0º in CM system
- 1,000,000 events for background simulations considering π^0 produced with phase-space distribution
- Further simulations for background channels have to be done considering better angular distributions

Photons at backward angles

Photons at backward angles have to be detected in the Backward end cap calorimeter.

Efficiency and Energy resolution studies have been done.

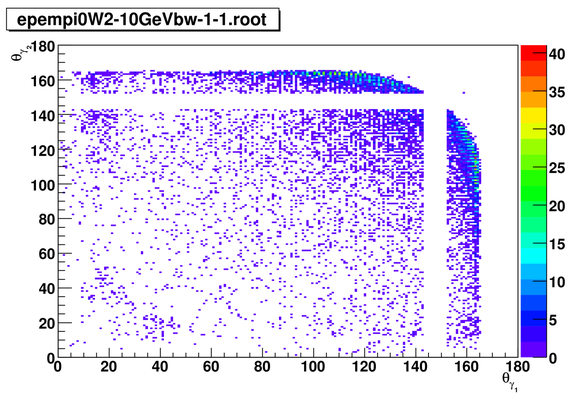

Backward End Cap Geometry

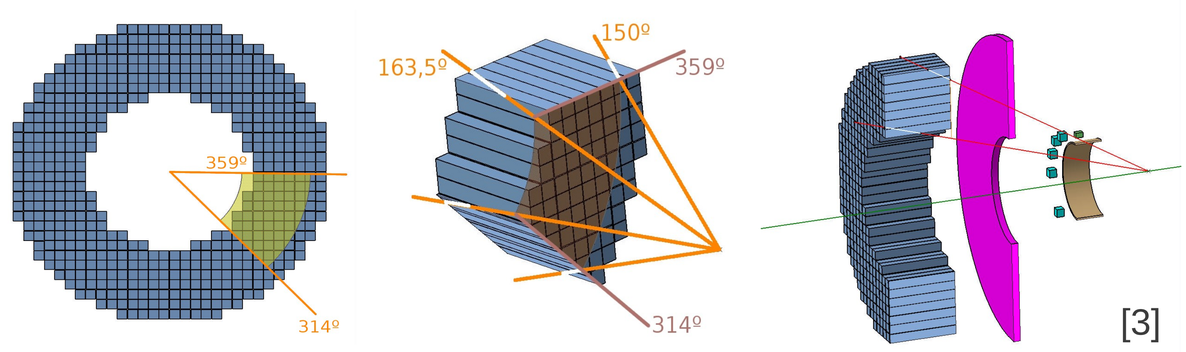

Calorimeter:

- 20 cm long crystals with front-face (24.4 x 24.4) cm^2, R_{min} = 182 mm, R_{max} = 406 mm, z = -594 mm (face pointing to the target)
- Angular range covered: 146º to 167º

Dead material from Straw Tube Tracker:

- 2 cm thick Al plate, R_{min} = 150 mm, R_{max} = 418 mm, z = -400 mm ~ 0.5 χ_0

Dead material from Micro Vertex Detector:

- 4 Cu boxes (14.5 x 14.5 x 22) mm^3 ~ 1.8 χ_0
- 10 Cu boxes (21.73 x 21.73 x 21.73) mm^3 ~ 1.8 χ_0
- Thin Cu cylinder ~ 0.5 χ_0

Background suppression studies

Electron PID cuts [4]:

- Very loose > 20 %
- Loose > 85 %
- Tight > 99 %
- Very tight > 99.8 % + 10% in each detector separately

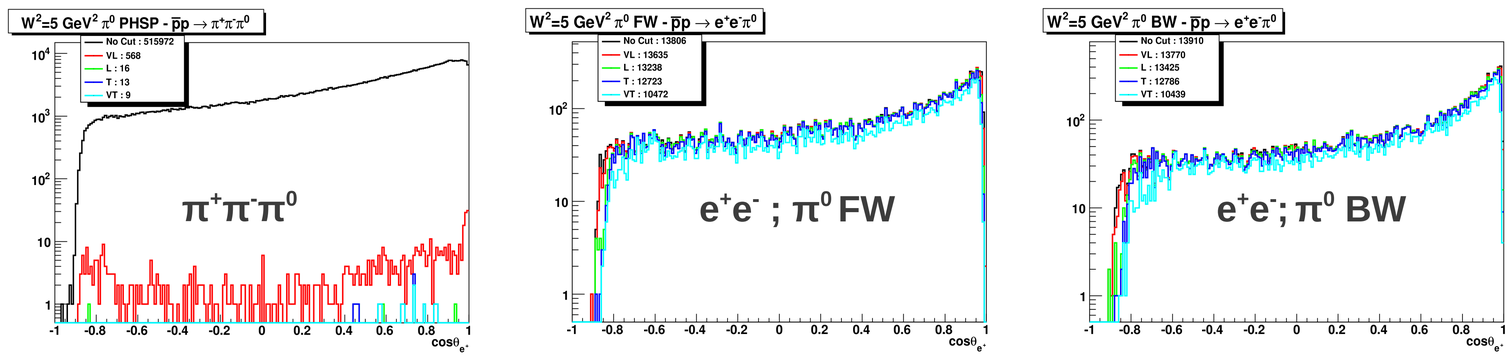

Percentage of events surviving the cuts without kinematical constraints

Cut	5 GeV² Background	5 GeV² Signal (π^0 fw)	5 GeV² Signal (π^0 bw)	10 GeV² Background	10 GeV² Signal (π^0 fw)	10 GeV² Signal (π^0 bw)
No cut	62 %	58 %	46 %	73 %	62 %	41 %
Very Loose	0.07 %	57 %	46 %	0.12 %	61 %	40 %
Loose	0.0019 %	55 %	45 %	0.003 %	60 %	38 %
Tight	0.0016 %	53 %	43 %	0.002 %	57 %	35 %
Very Tight	0.0011 %	44 %	35 %	0.0016 %	49 %	27 %

First analysis and results are promising:
The background is highly suppressed using only PID cuts.

More analysis is needed to be able to compare with $\bar{p}p \rightarrow e^+e^-$ analysis [5].

π^0 invariant mass
($W^2 = 5\ GeV^2$; π^0 bw)

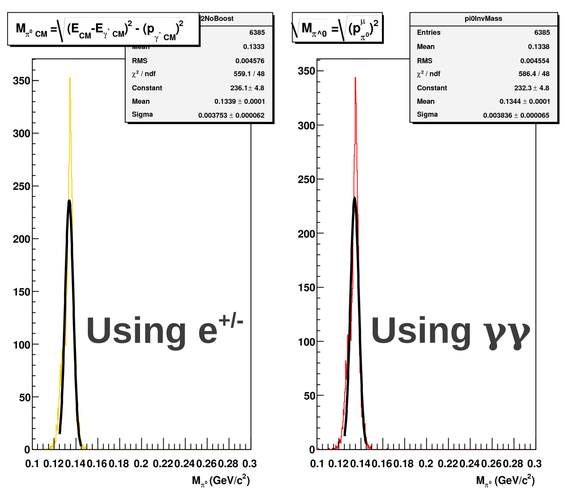

Good results for the first estimations of the π^0 mass.

The calculation of π^0 mass using γ's or $e^{+/-}$ give similar results for the mass resolution.

[1] http://www-panda.gsi.de/ ; [2] Phys.Rev.D 76:111502, 2007 ; [3] Drawings by D. Rodríguez ; [4] arXiv:0903.3905 [hep-ex] ; [5] Eur.Phys.J. A44:373-384, 2010