The Strip Detector of the PANDA MVD

Tommaso Quagli, Kai-Thomas Brinkmann, Robert Schnell, Hans-Georg Zaunick
II. Physikalisches Institut, JLU Gießen

on behalf of the PANDA MVD Group

RD13 Conference
July 5th, 2013

JUSTUS-LIEBIG-UNIVERSITÄT GIESSEN

II. Physikalisches Institut

Outline

1. **Design of the PANDA MVD**
   - The PANDA Experiment
   - Disk and Barrel Parts of the Detector
   - Mechanical Integration of the Barrels
   - Powering Concept
2. **Hardware developments**
   - Front-end ASIC
   - Double-sided Silicon Strip Sensors
   - Sensor Irradiations
   - Hybrid Bus

Design of the PANDA MVD

The PANDA Experiment

- Fixed target experiment at FAIR, Darmstadt
- Antiproton beam with p = 1.5 – 15 Gev/c and hydrogen or nuclear target
- Maximum luminosity $2 \cdot 10^{32}$ cm^{-2} s^{-1}; interaction rate $2 \cdot 10^{7}$ s^{-1}
- Continuous, triggerless readout

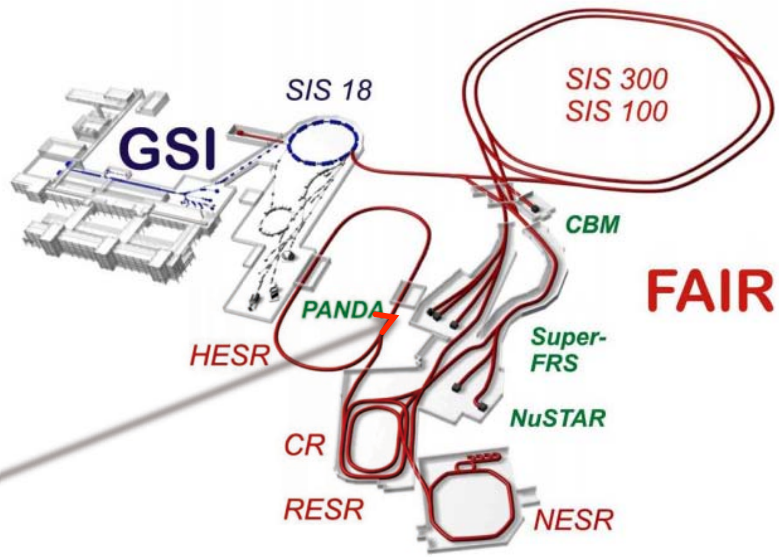

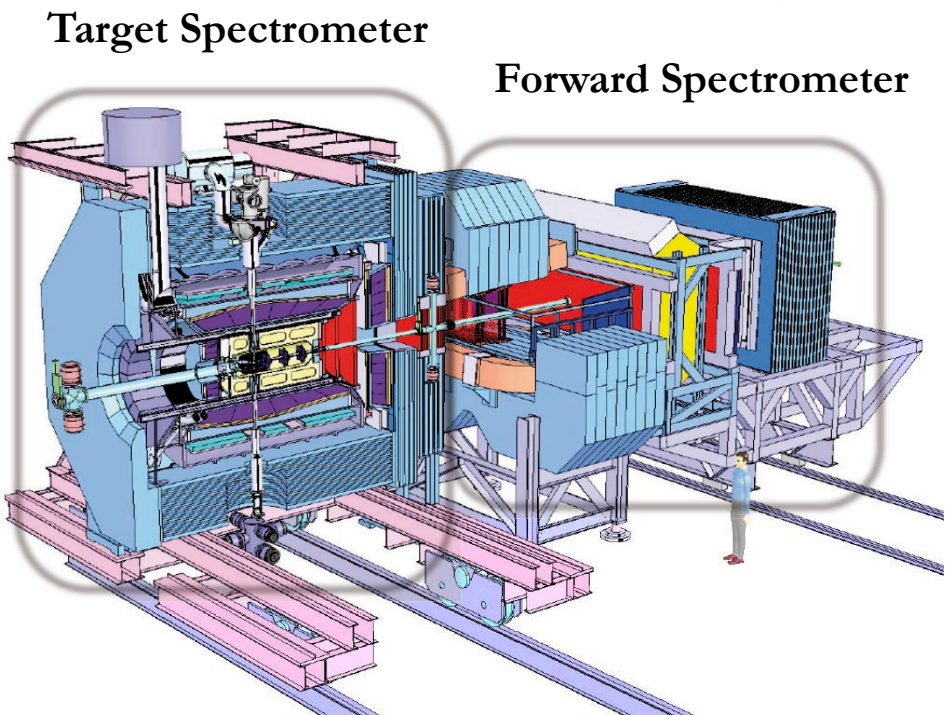

Physics program:

- High precision charmonium spectroscopy
- Search for hybrids and glueballs
- Study of exotic states (X, Y, Z)
- Nucleon structure
- Hyper-nuclear physics

The Micro Vertex Detector

- High resolution (<100 μm) vertexing; good time resolution (<6 ns)
- Radiation tolerance up to ~$4 \cdot 10^{14}$ $n_{1MeV\ eq}$ /cm^2
- High rate capability ($2 \cdot 10^7$ pbar-p annihilations/s) and triggerless readout
- Low material budget (<10% radiation length overall)

Double-sided Strip Part:

- 2 Outer Barrels
- Part of the 2 outer Disks

~ $2 \cdot 10^5$ channels, 0.5 m^2 silicon area

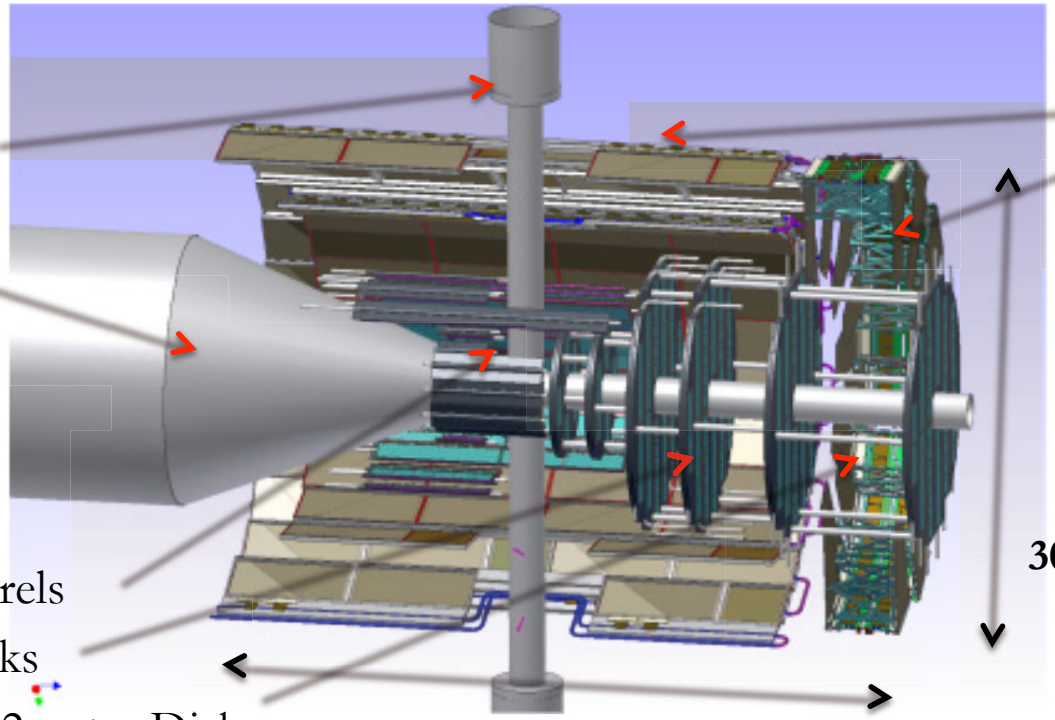

Hybrid Pixels Part:

- 2 Inner Barrels
- 4 Inner Disks
- Part of the 2 outer Disks

~ $10.5 \cdot 10^6$ channels, 0.1 m^2 silicon area

Strip Disks

Disk part:

- Trapezoidal sensors
- Stereo angle: 15°
- Strip pitch: 67.5 μm
- 512 channels per side
- Supermodule: two corresponding sensors on the two disks
- 2 disks at z = 155 and 215 mm, 24 sensors per disk

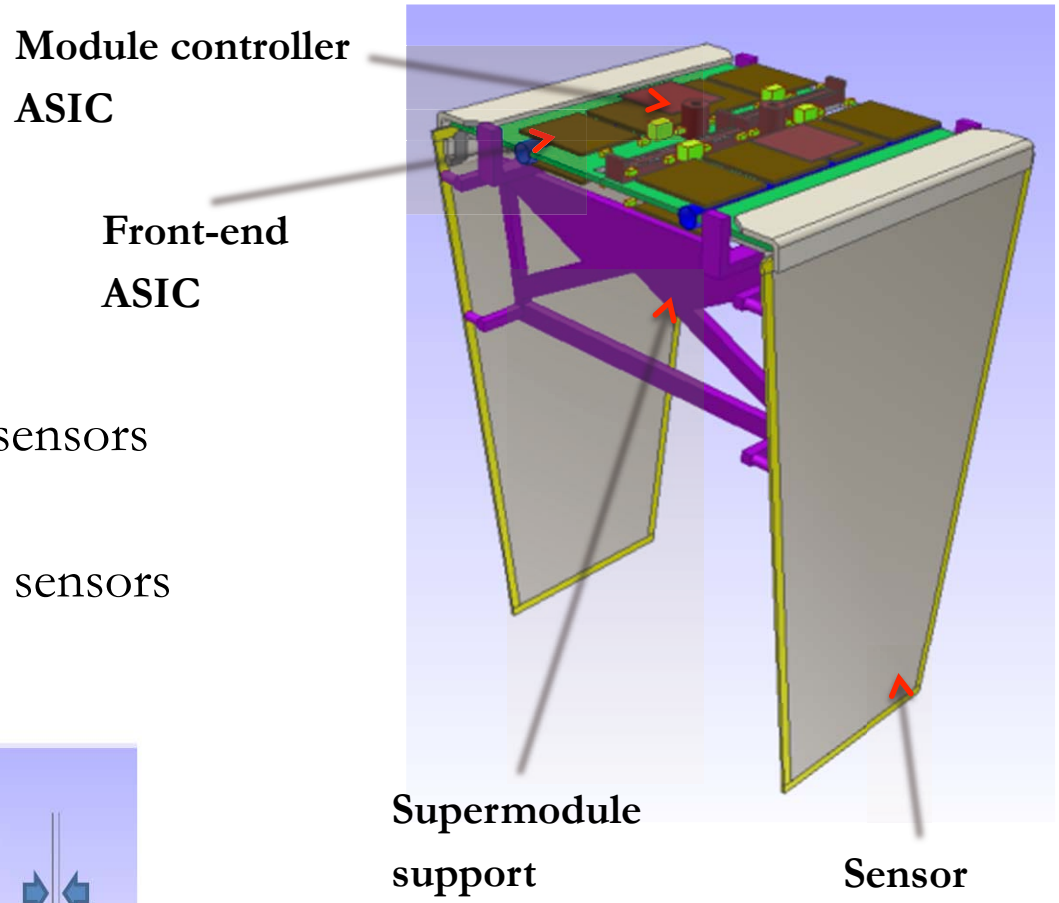

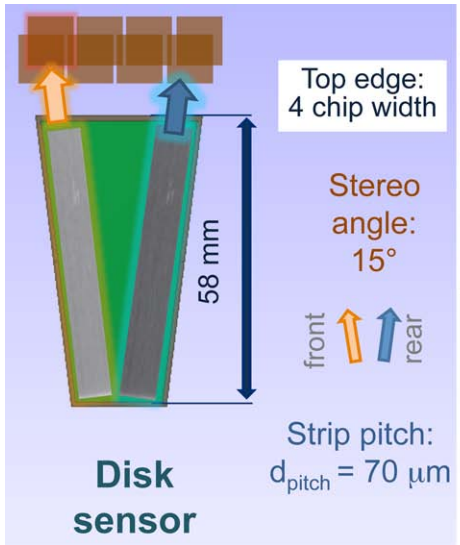

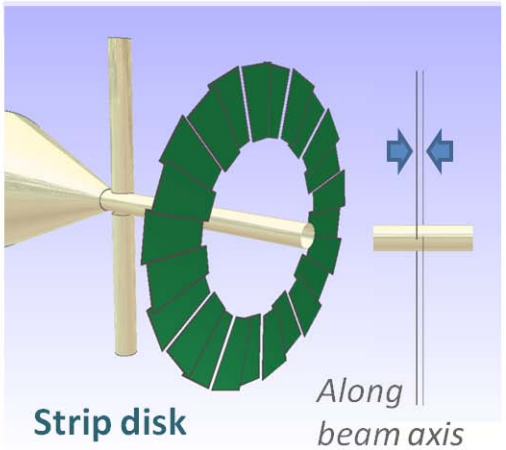

Strip Barrels

Barrel part:

- Rectangular (512 × 896 channels) and squared (512 × 512 channels) sensors
- Stereo angle: 90°, strip pitch 65 μm
- Two barrels at r = 92 and 125 mm
- 4 – 6 sensors on each of the 46 staves (248 sensors in total)

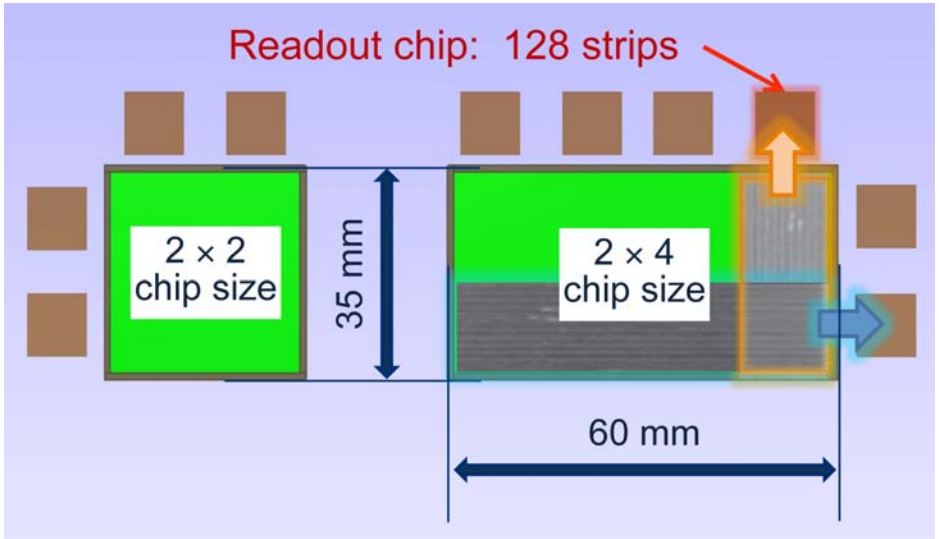

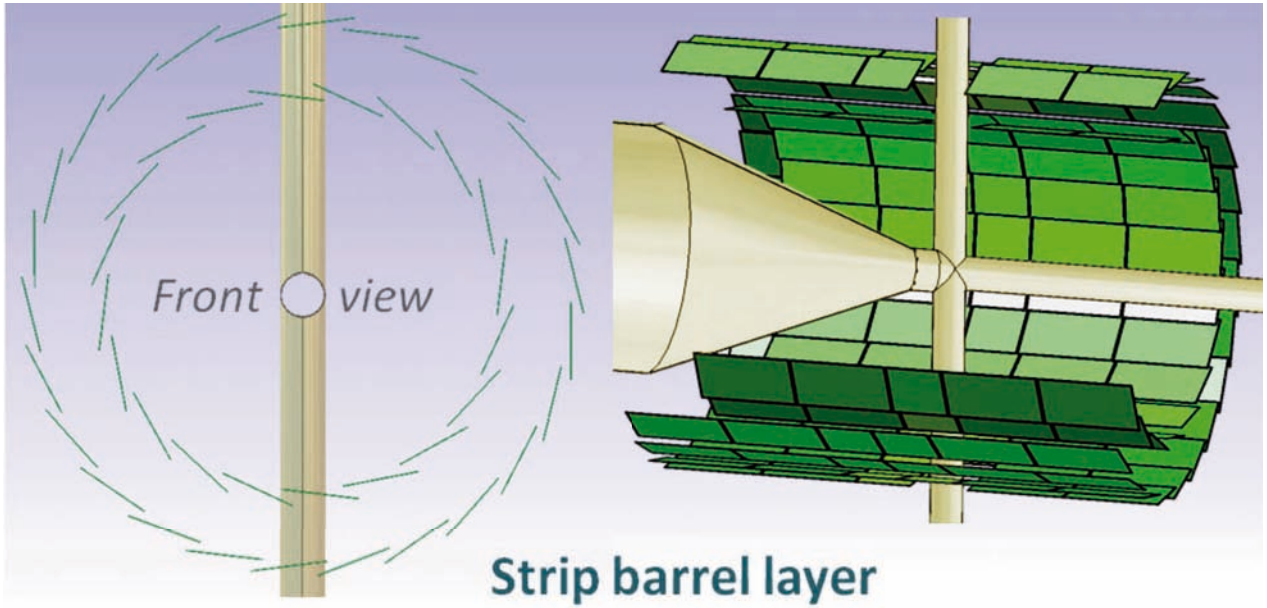

Strip Barrels – Stave Design I

Strip supermodule:

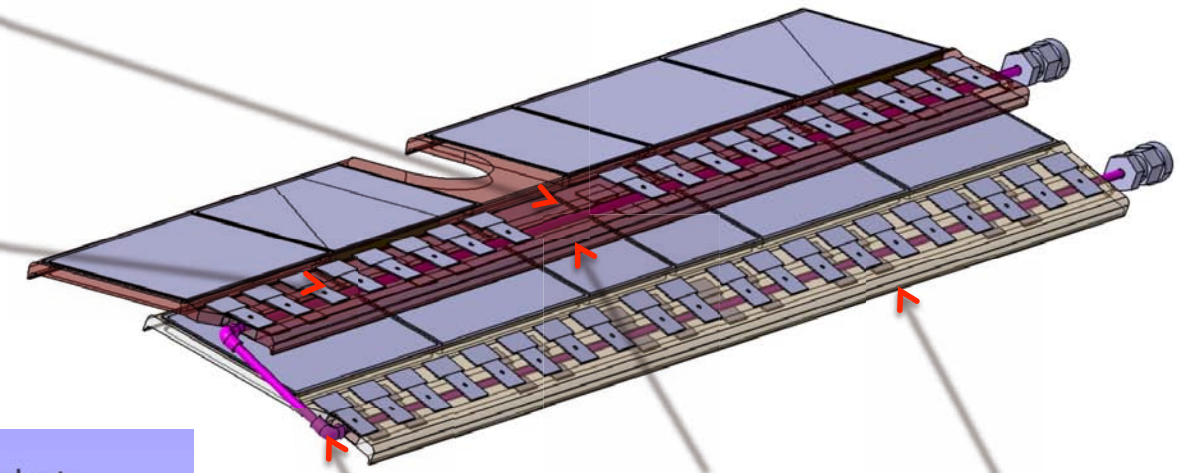

Readout concept:

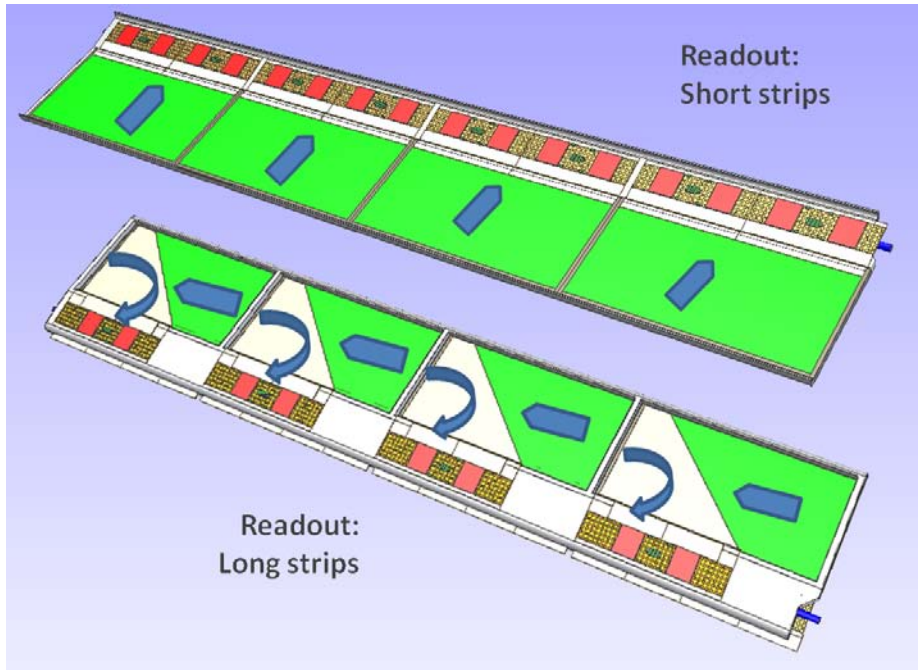

Strip Barrels – Stave Design II

- Sandwich structure of carbon fiber (200 μm) and foam (2 mm)
- Up to 18 W dissipated on one stave → active water cooling
- Embedded cooling pipe in nickel-cobalt alloy (2 mm diameter, 80 μm wall thickness)
- Carbon foam (POCO HTC) in the area around the cooling pipe

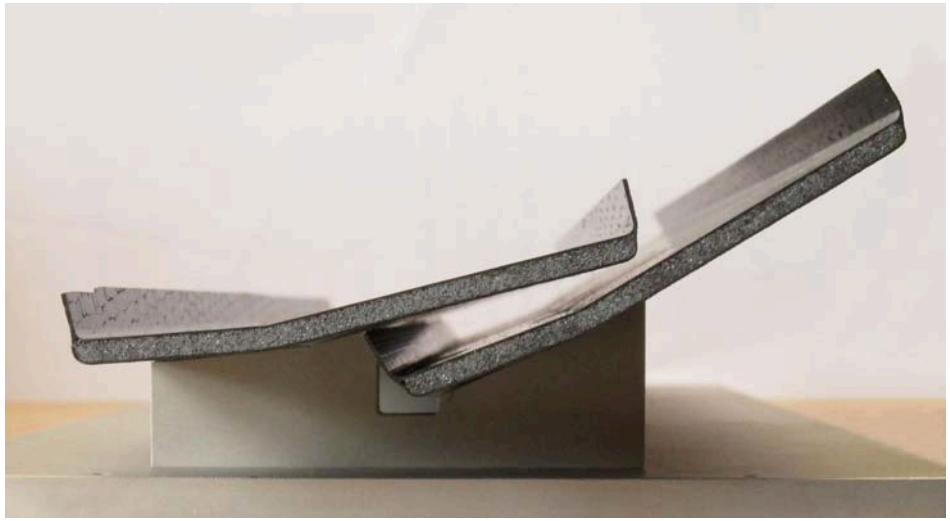

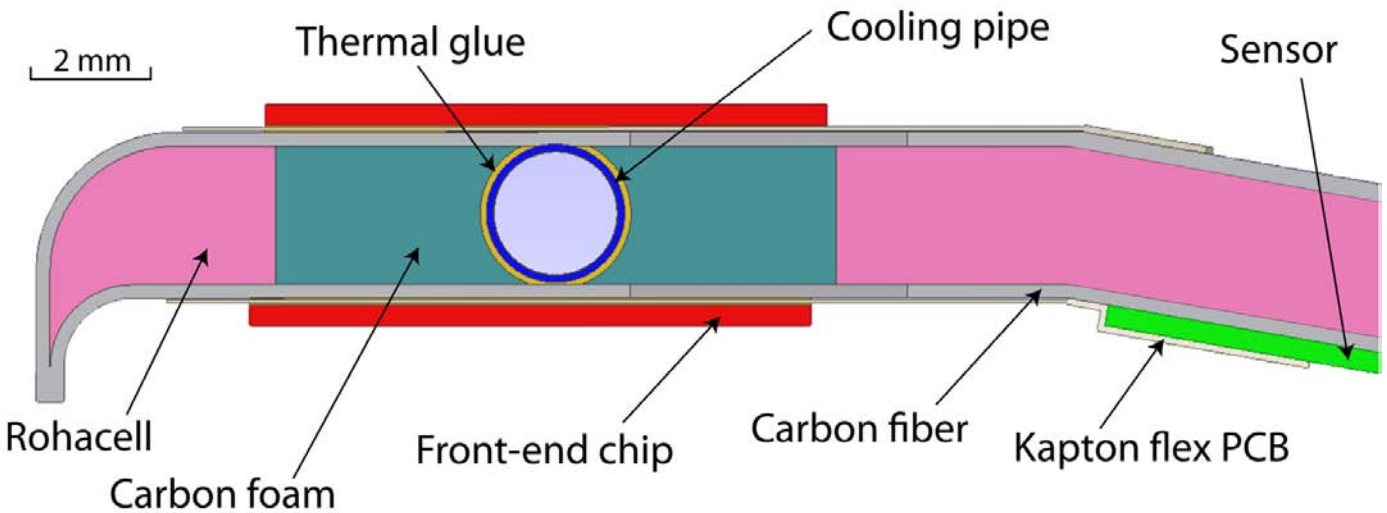

Strip Barrels – Stave Design III

- Large cutouts for the sensors
- Special design for top/bottom staves around the target pipe
- 6 different designs in total

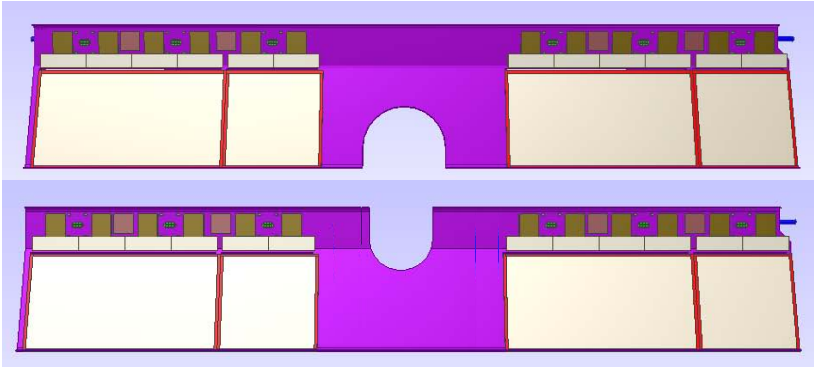

31.3 cm

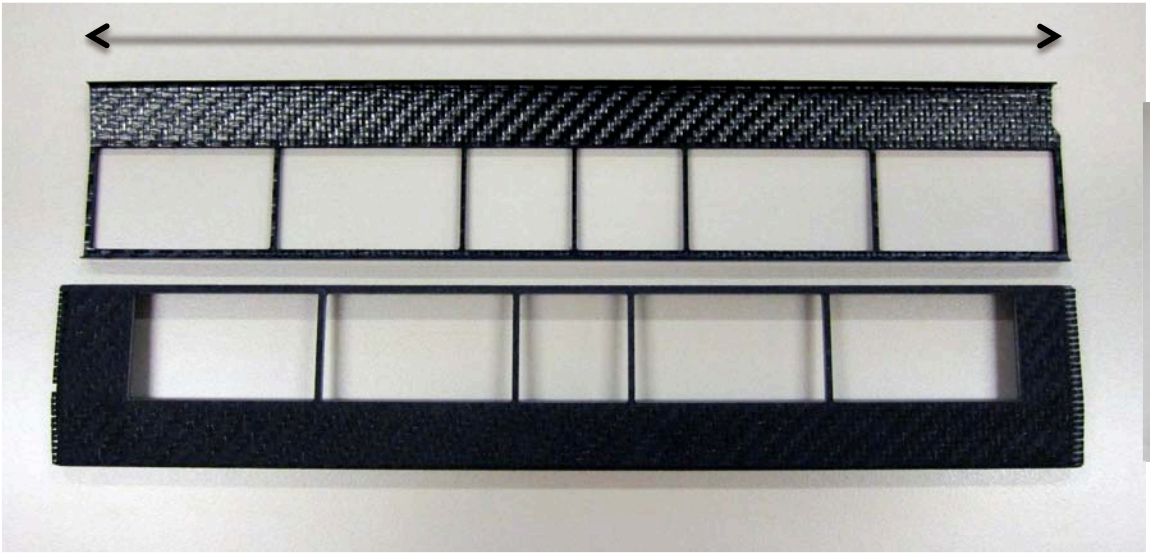

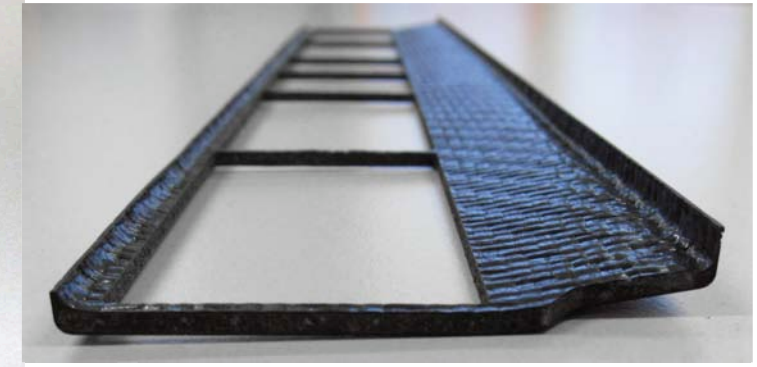

~6 cm

- Waiting for a prototype complete with cooling pipe to perform thermal tests

Mechanical Integration

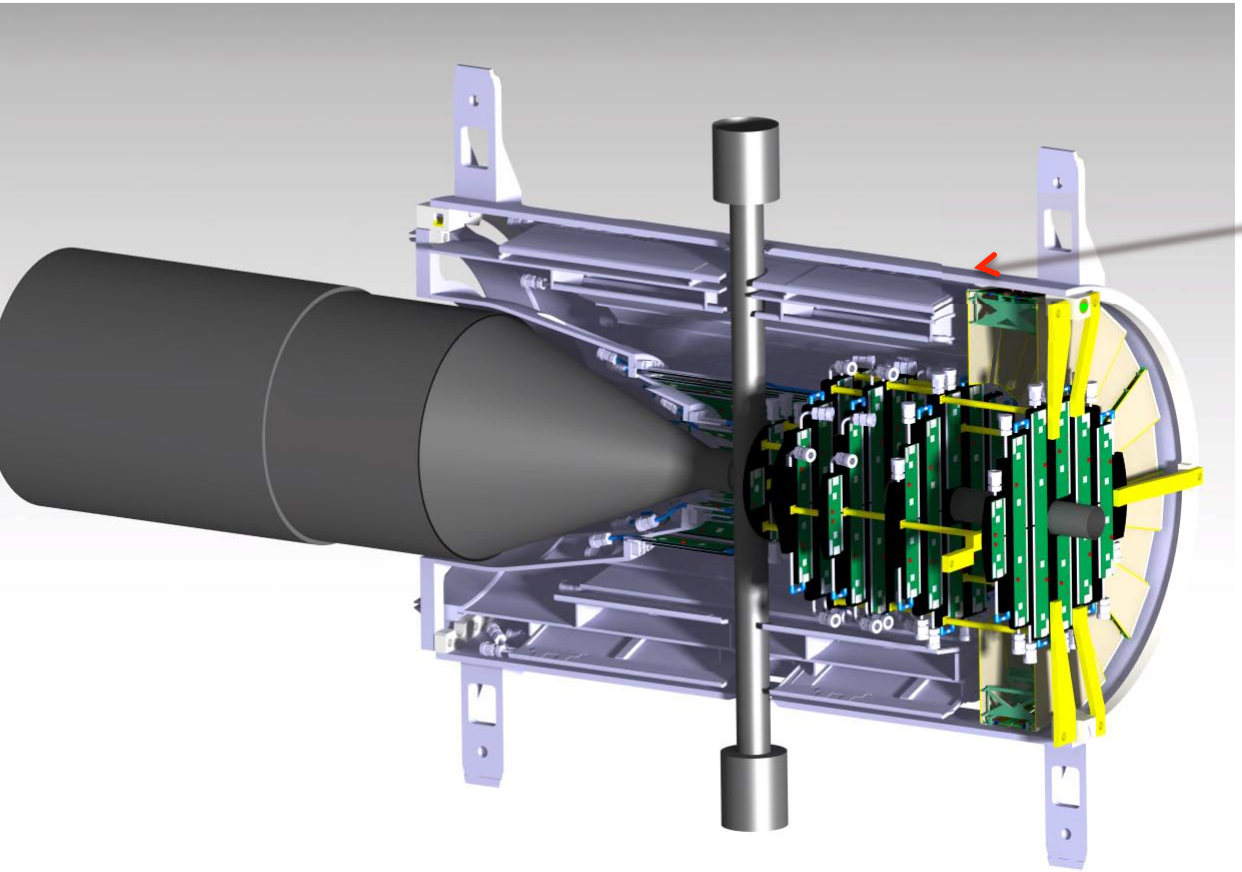

Complete half-detector

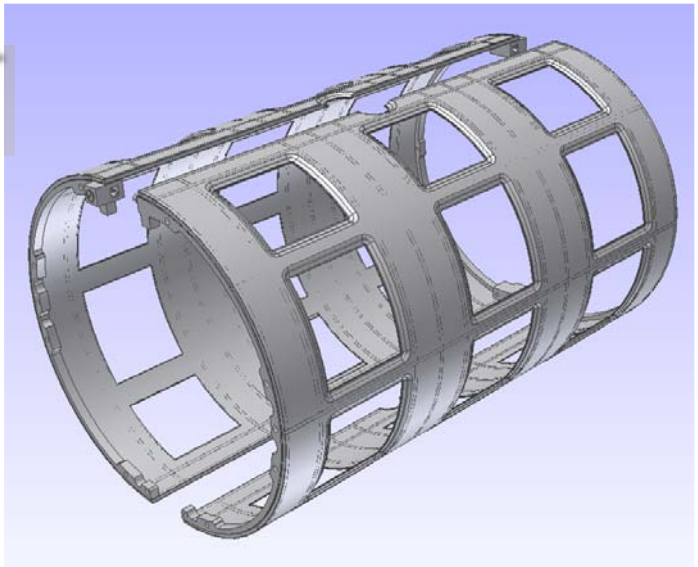

Global frame

Mechanical Integration – Strips

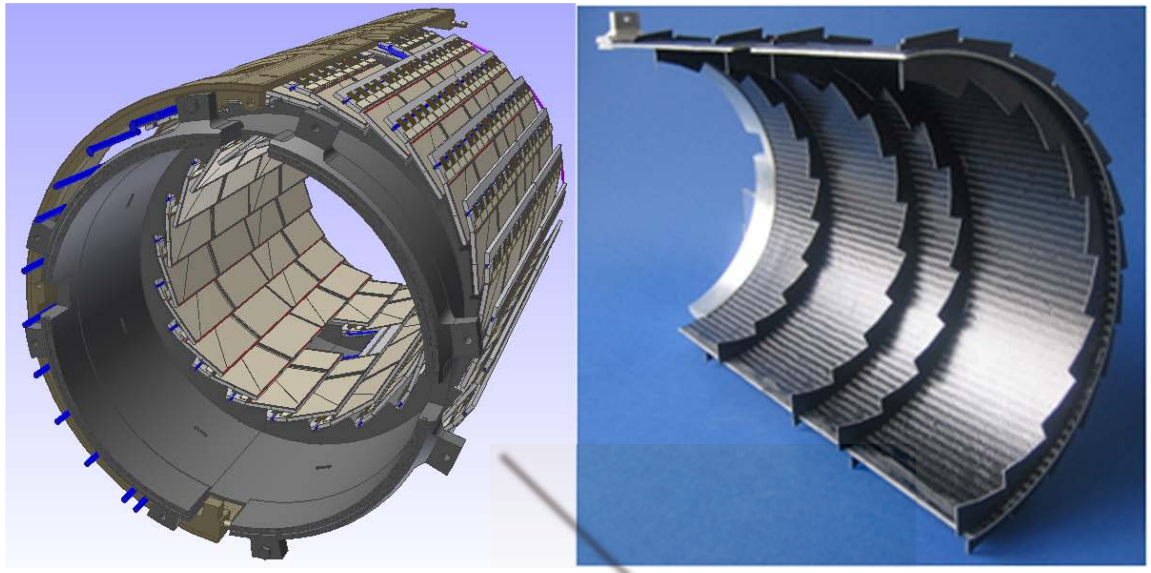

Barrel part

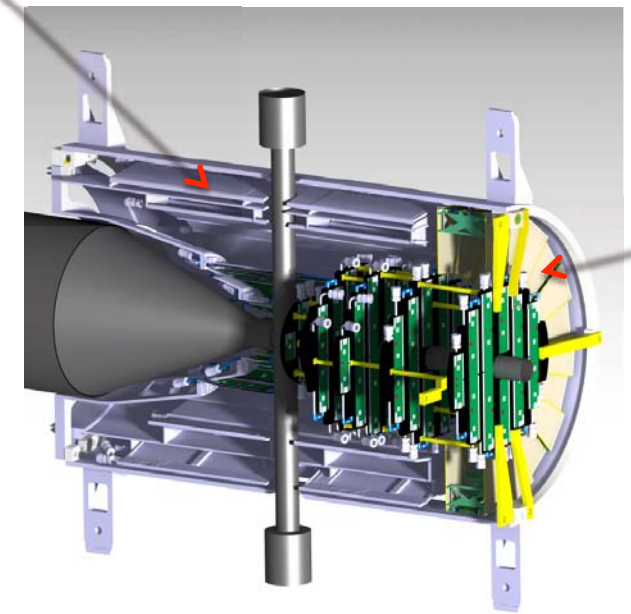

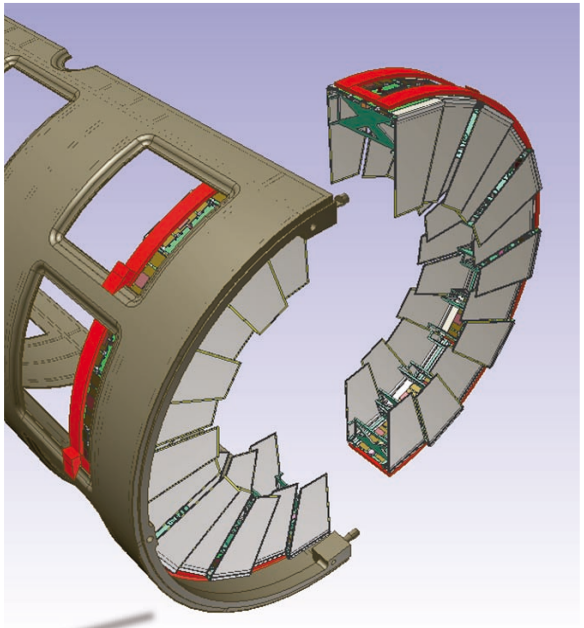

Disk part

Strip Stave Powering

- DC-DC powering operating in B=2T
- 5 power domains per sensor
- up to 60 power supply cables per strip barrel stave (up to 4 m long)
- ~1500 converters for barrels + disks (+600 for pixel detector)
- MVD services routing is a crucial issue

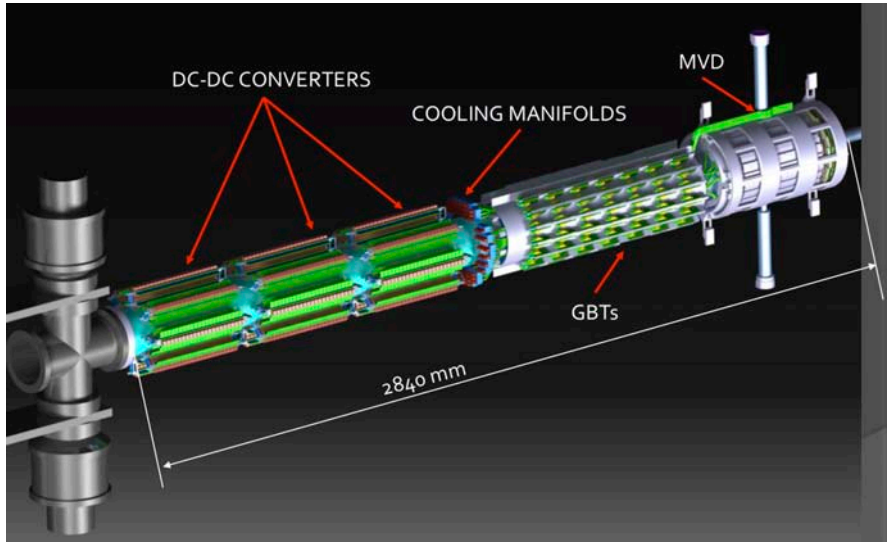

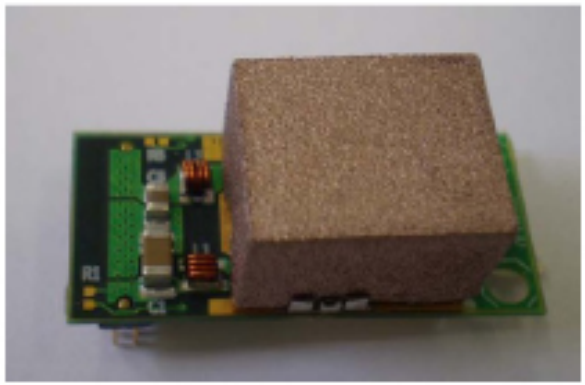

SM01C converter (CERN development)

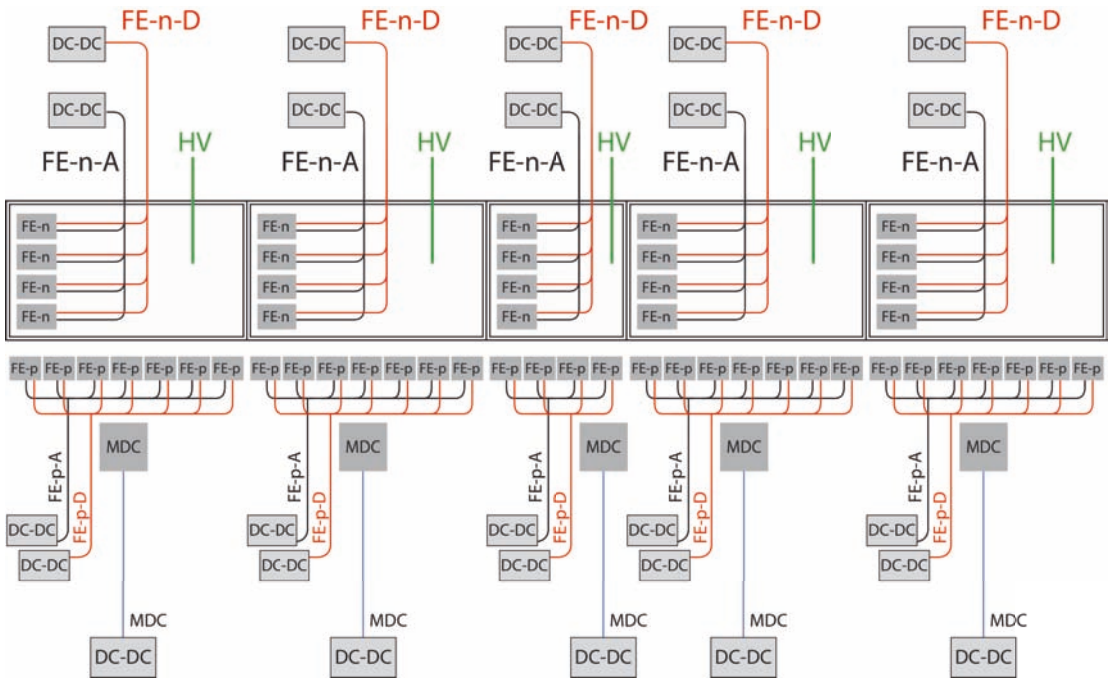

Hardware development

Front-end ASIC – I

Requirements to the strip front-end:

- Self-triggering
- Radiation hard up to 10 Mrad
- Power budget 1W/cm^2
- Charge measurement
- Input rate up to 40 kHz
- Noise <1500 e^-
- Fully digital outputs
- Sensor capacitance at the input ~20 pF

→ no chip available on the market which satisfies all these requirements

Front-end ASIC – II

New strip ASIC:

- Developed by INFN Torino with JLU Gießen and FZ Jülich
- Front-end adapted from ToPix (modified for larger input capacitance)
- Amplitude measurement with the Time-over-Threshold technique
- High resolution (~100 ps) time digitization with TDCs adapted from TOFPET
- Clock frequency 155.52 MHz
- Power budget: ~4 mW / ch

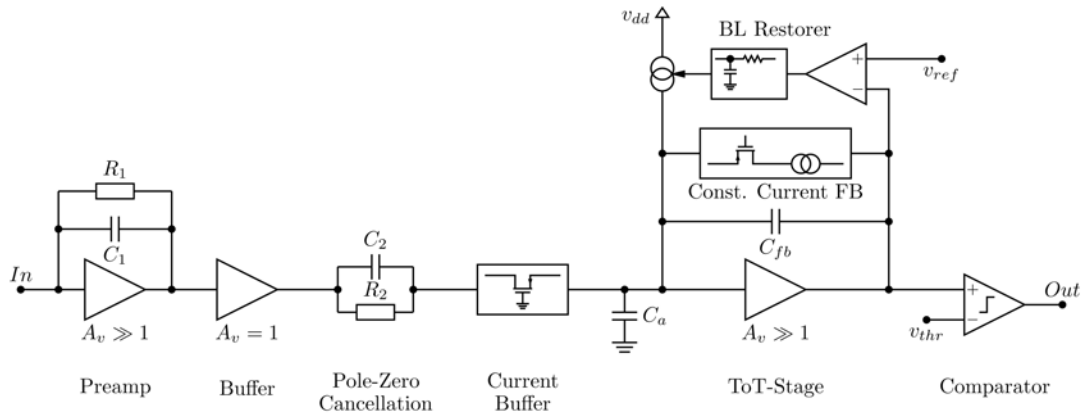

First submission expected in some months

Sensor Characterization – Prototypes

Wafer properties:

- Fabricated at CiS, Germany
- FZ Si, 4” wafer
- Thickness: 285 ± 10 μm
- Resistivity: 2.3 … 5 kΩ · cm
- Biasing: punch-through
- n-side insulation: p-spray

S1 (PANDA rectangular)

- 896 × 512 channels
- 58.3 × 33.3 mm^2

S2 (PANDA squared)

- 512 × 512 channels
- 33.3 × 33.3 mm^2

S4 (“Baby”)

- 128 × 128 channels
- 8.4 × 8.4 mm^2

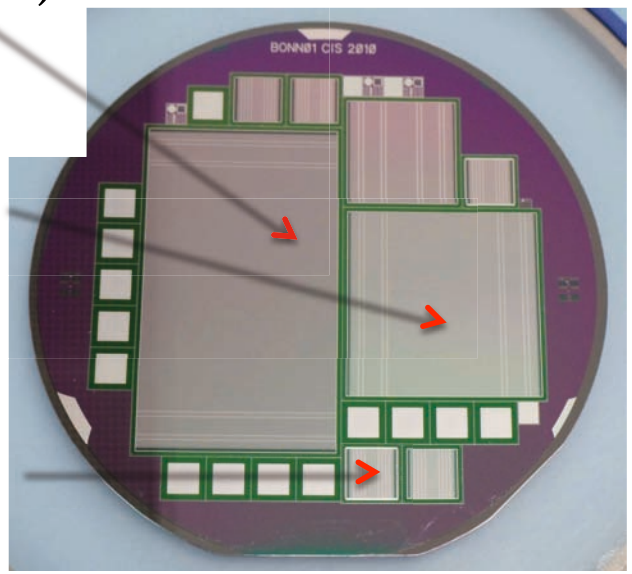

General sensor properties:

- Stereo angle: 90°
- Guard rings: 8
- Pitch: 65 μm or 50 μm
- Readout: 1 DC pad and 4 AC pads per strip

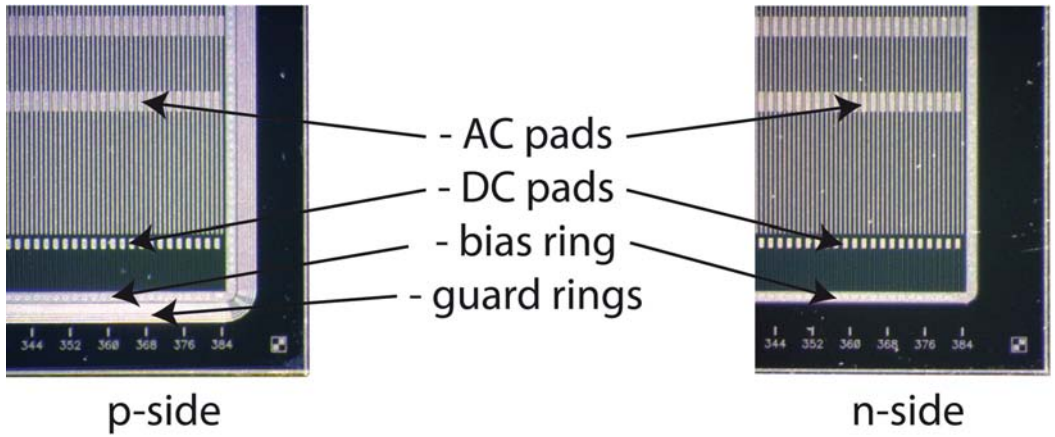

See T. Quagli et al., IEEE NSS CR N14(219) (2012) 1365-1369

Sensor Characterization – Setup

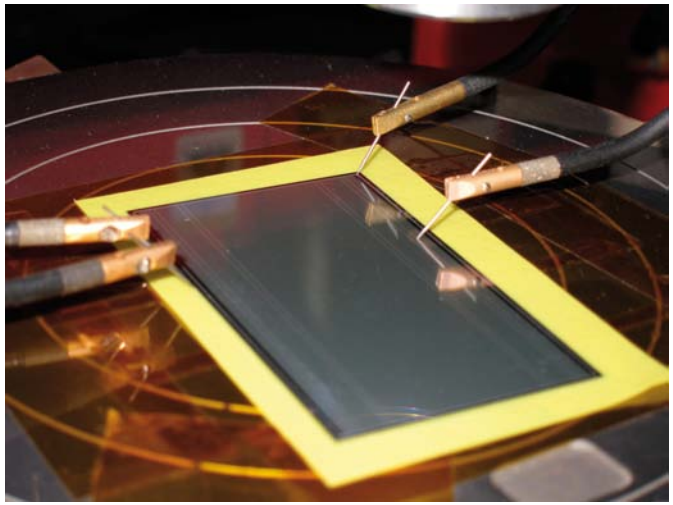

Probe station

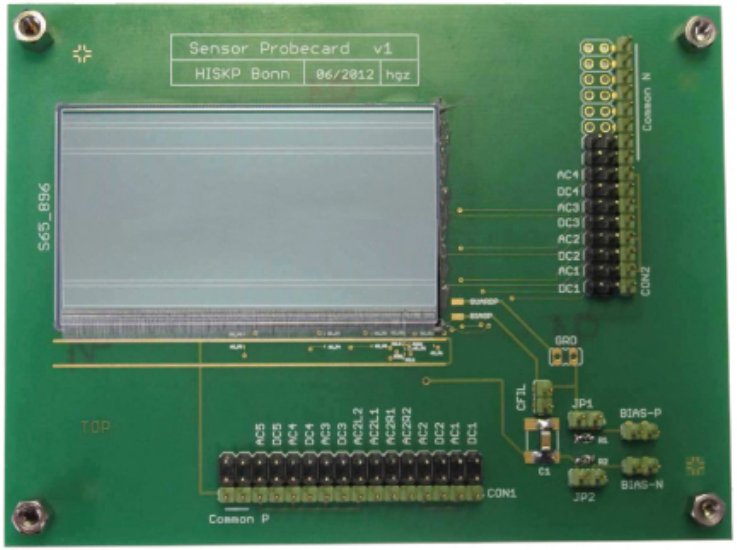

Fixed contact probe-card to connect all back-side strips

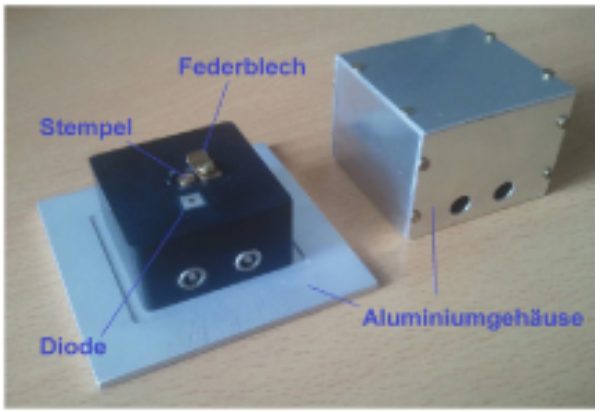

Test enclosure for connection of diodes

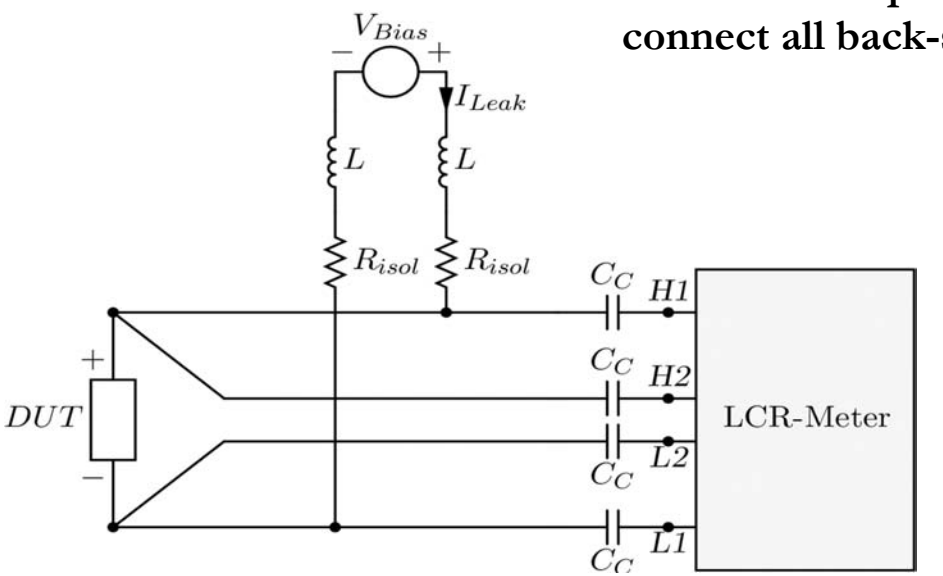

Sensor Characterization – S1 Sensor

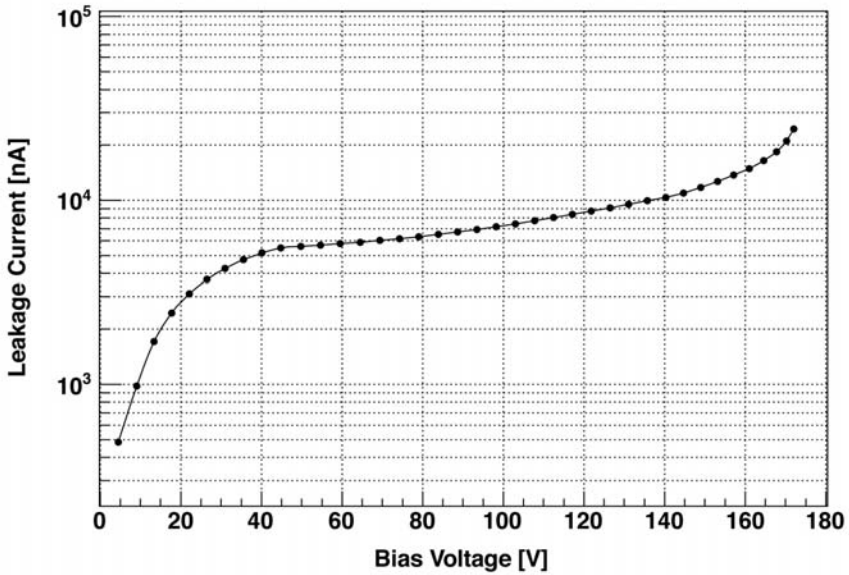

Leakage current

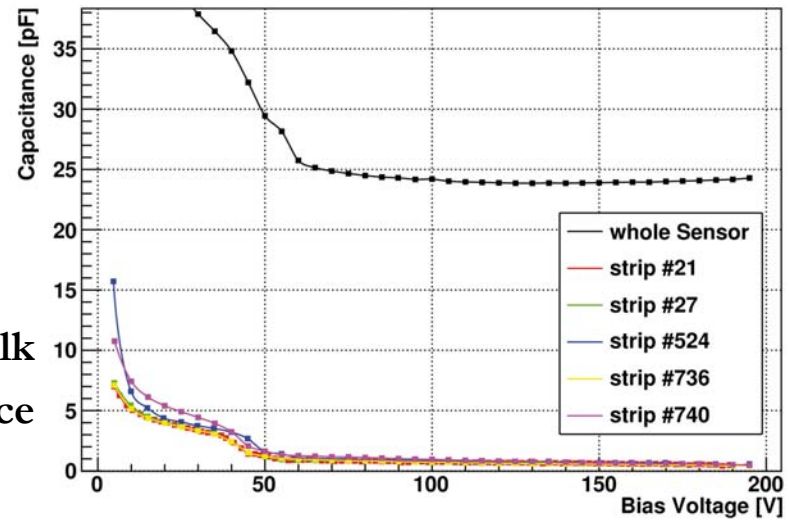

Strip-to-bulk capacitance

Parameter	Measurement
Full depletion voltage	~ 55 V
Leakage current	~ 6μA @ 50 V
Bulk capacitance	680 pF
Interstrip capacitance	~ 10 pF @ 50 V
Coupling capacitance	> 45 pF/cm
C_{input}	9.8 ± 0.2 pF (p-side) 17.1 ± 0.4 pF (n-side)

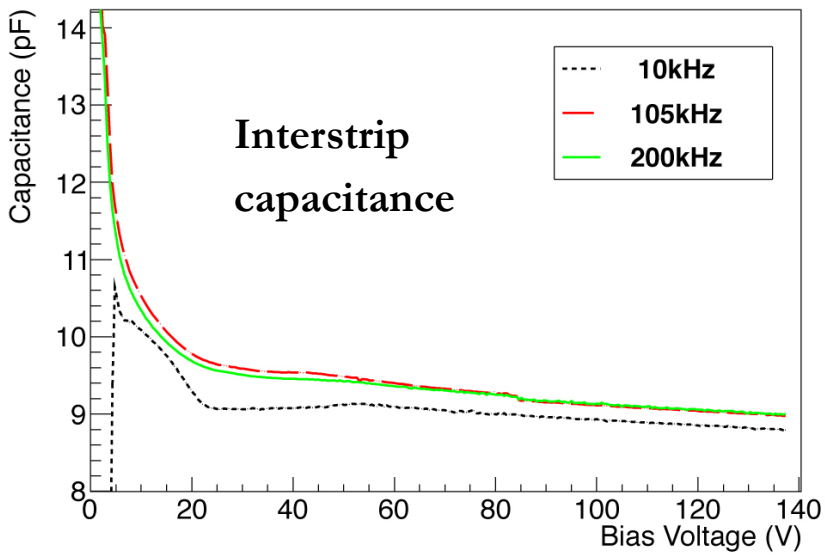

Interstrip capacitance

Sensor Irradiations – I

Irradiation studies on S4 ("Baby") sensors

- Proton irradiations at the Bonn Isochronous Cyclotron
  → fluence between 10^{13} and 10^{15} n 1MeV eq /cm^2
- Neutron low-fluence ($3 \cdot 10^{10}$ n 1MeV eq /cm^2) irradiation with Am-Be source
- Neutron high-fluence ($1.6 \cdot 10^{16}$ n 1MeV eq /cm^2) irradiation at research reactor in Delft
- Annealing phase (80 minutes at 60°C)

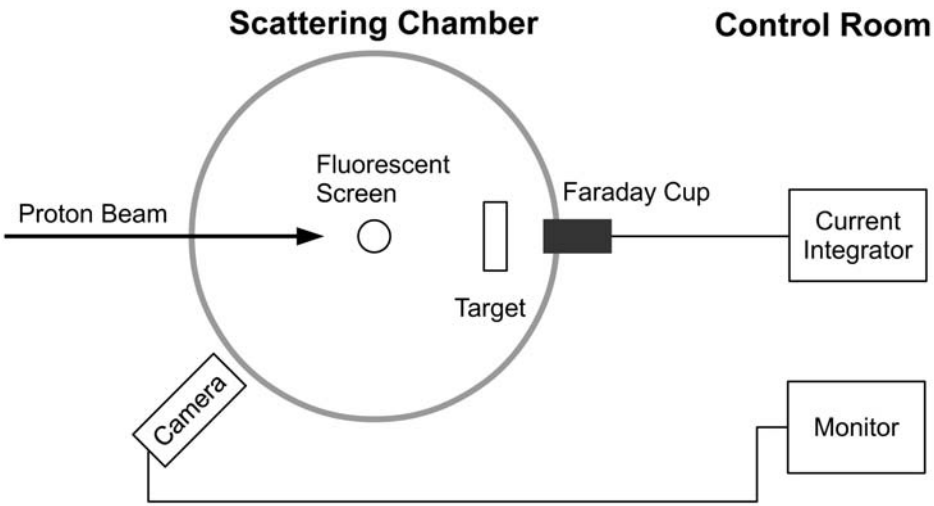

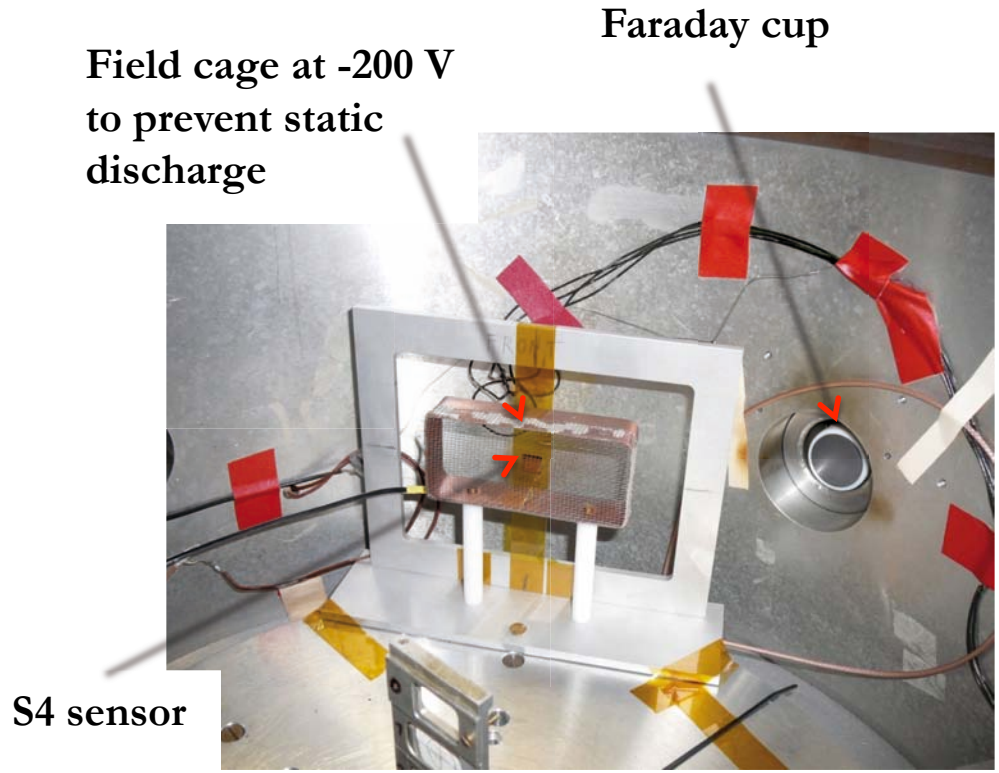

Sensor Irradiations – II

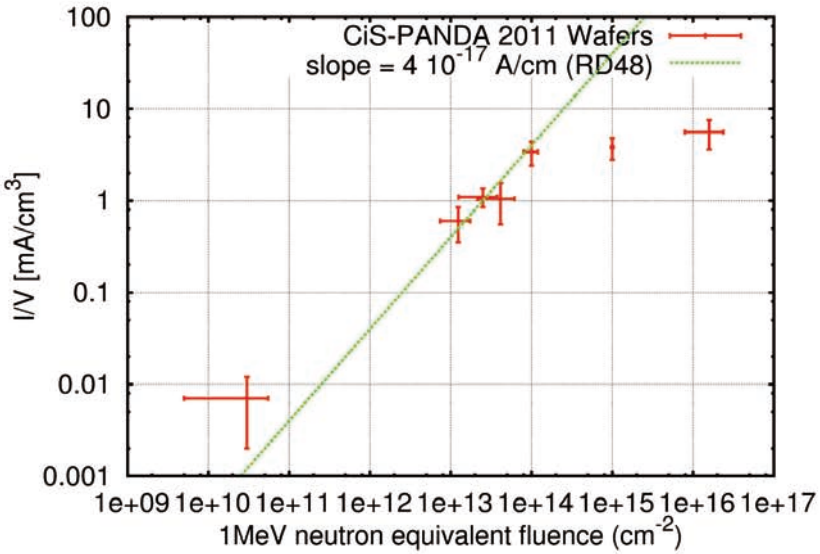

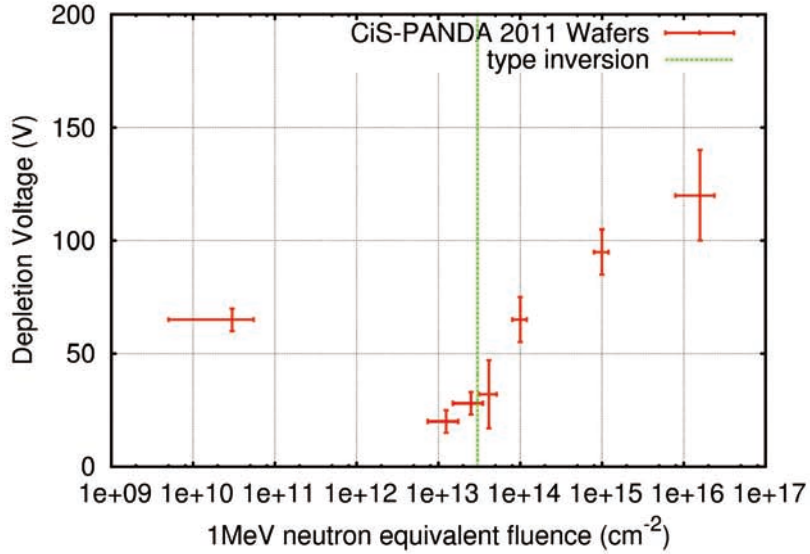

- Full depletion voltage remains below 100 V at end of PANDA lifetime
- New sensor batch with polysilicon biasing is coming soon

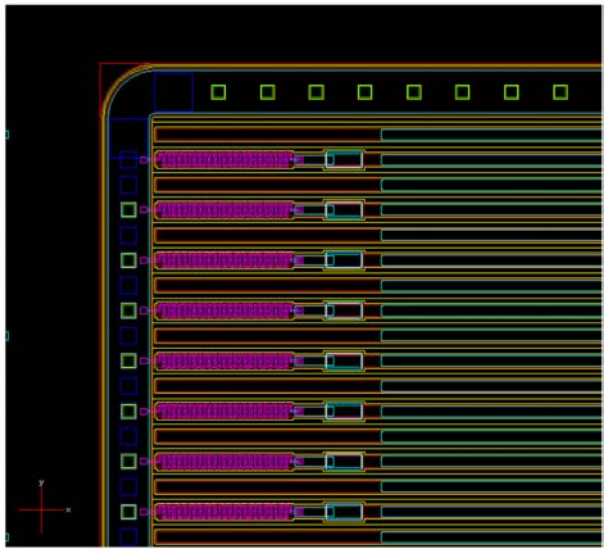

Sensor Characterization – Beam Test

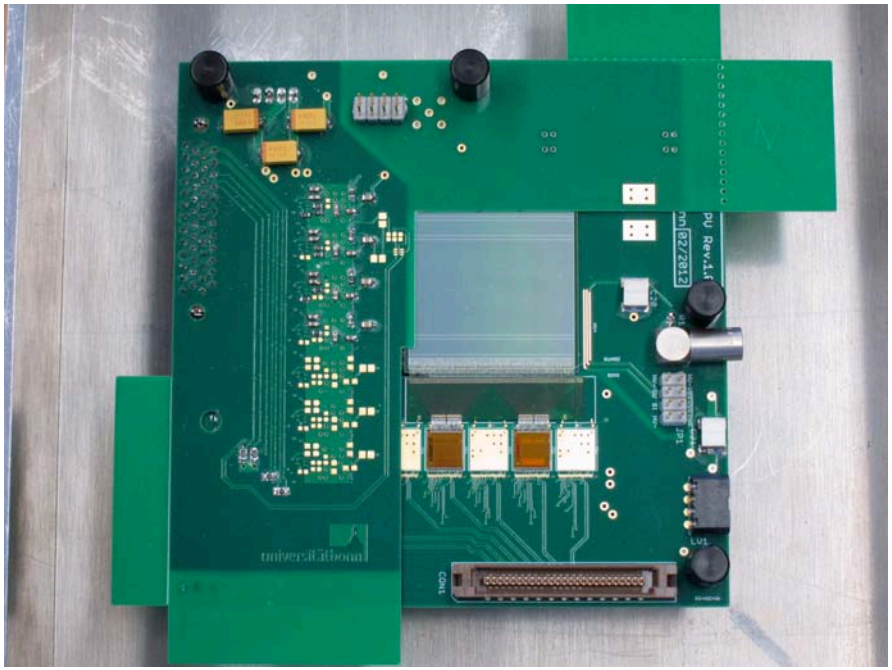

Squared sensor assembled on a test board and successfully tested at SPS, CERN (September 2012)

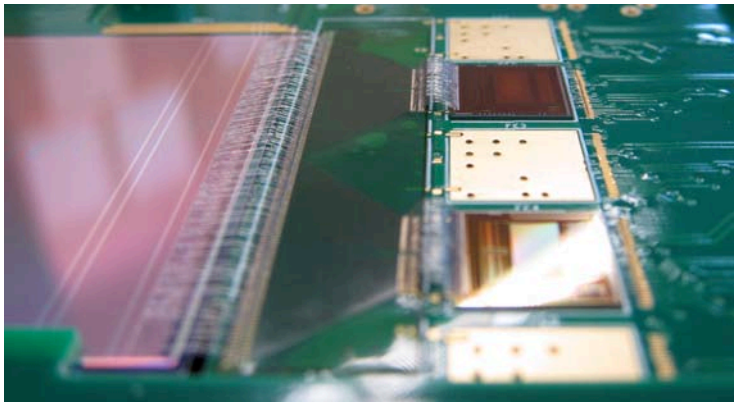

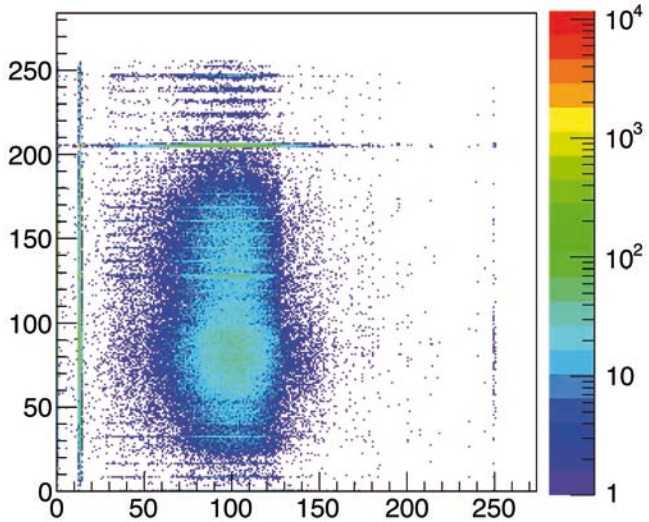

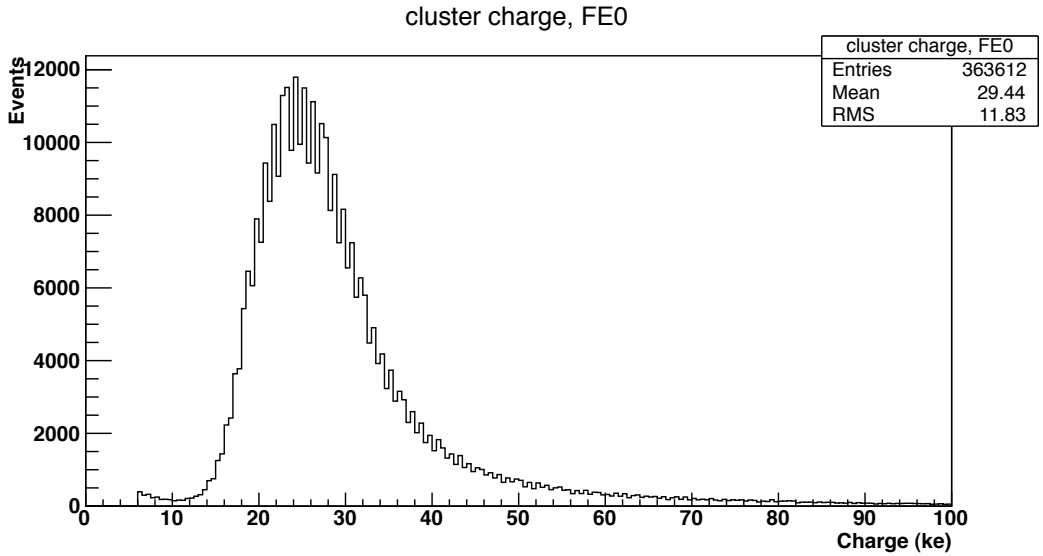

Strip Barrels – Hybrid Bus

- Connects the sensor and the front-end chips, adapting the pitch
- Distributes I/O signals (and possibly power) to the chips
- Reduced-scale prototype with APV25 readout chip produced

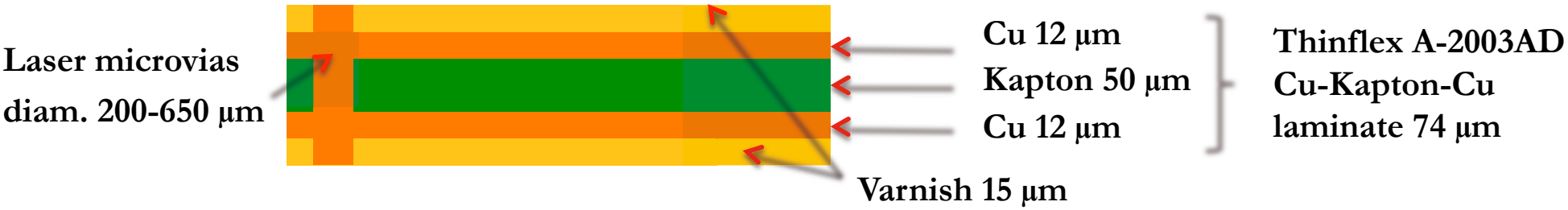

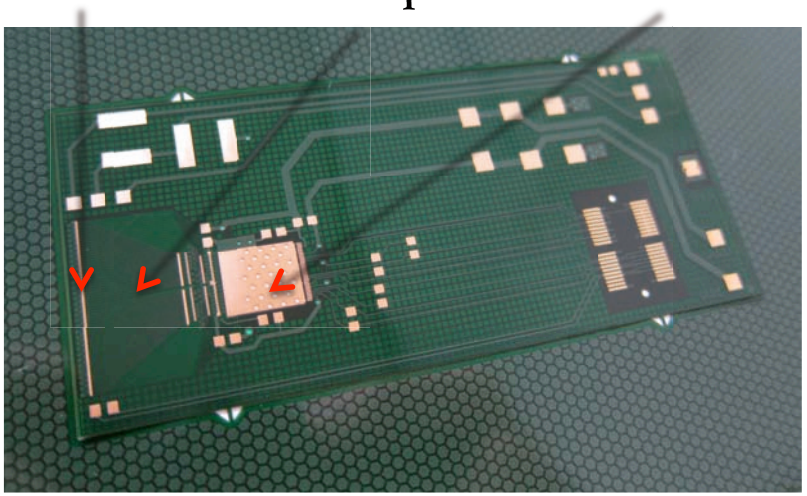

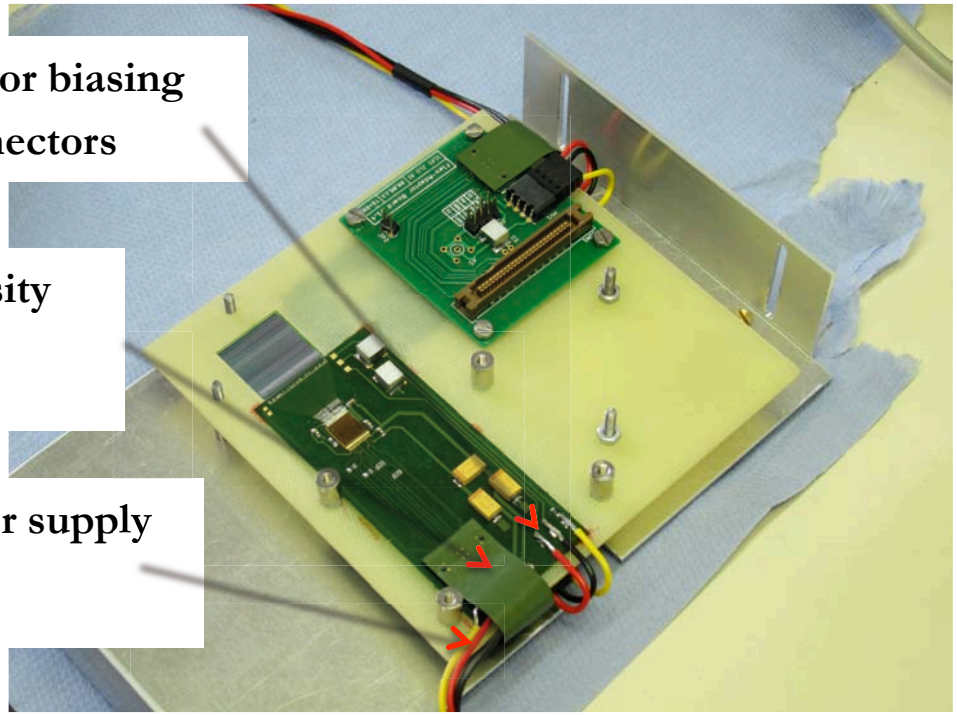

Strip Barrels – Hybrid Bus II

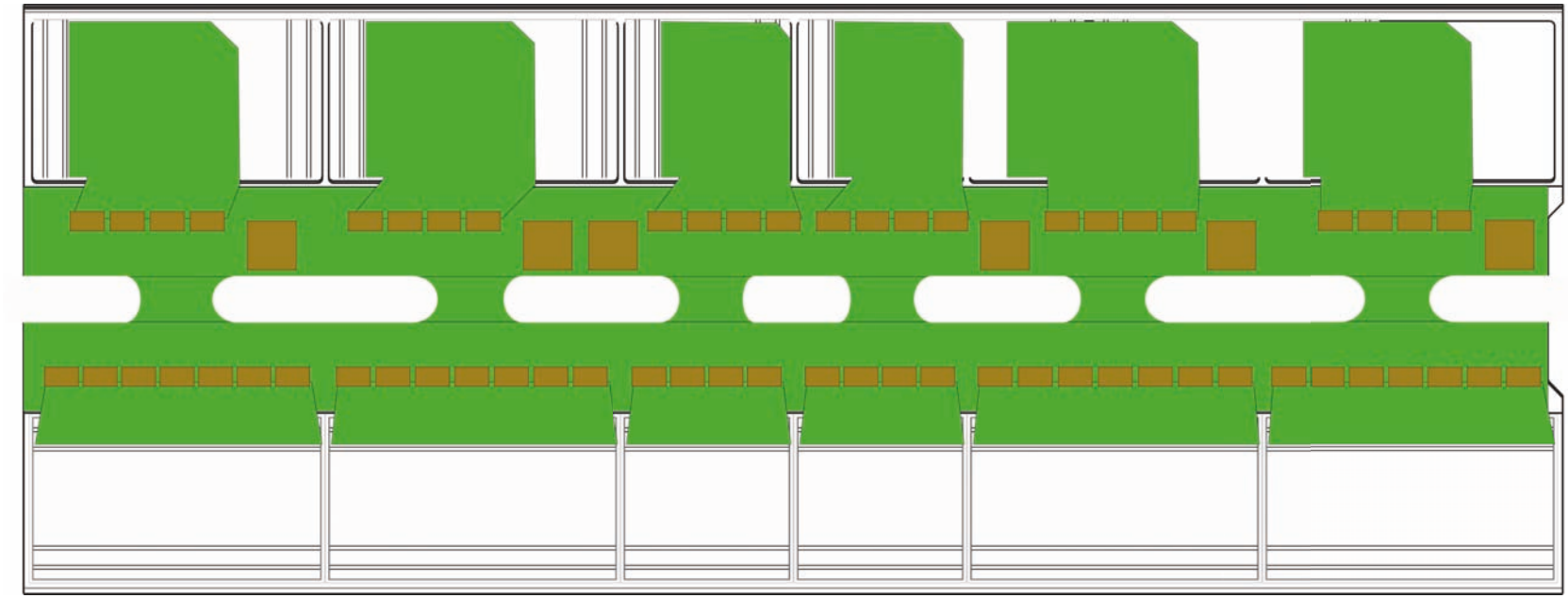

Proposal for the full hybrid layout

Chips-sensor fanout structure

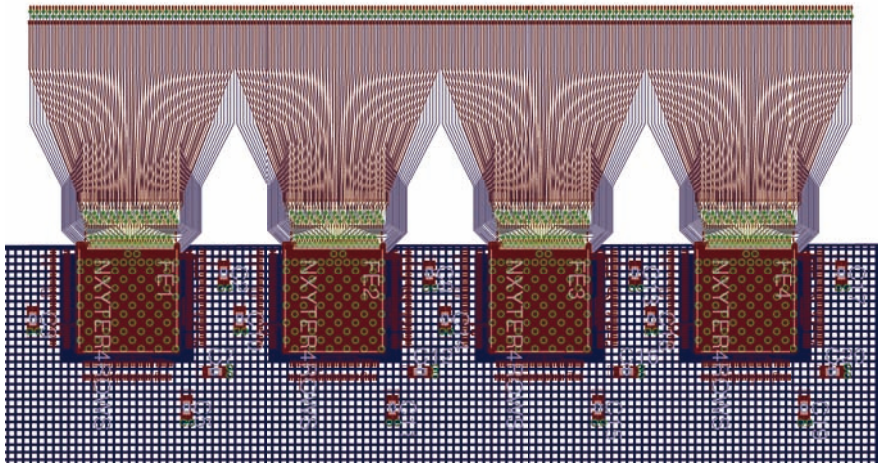

Conclusions and Outlook

- **The general design of the PANDA MVD is finalized.**
- **Development and validation of components is ongoing:**
  - Front-end electronics under design;
  - First batch of sensors fully characterized;
  - Reduced-scale hybrid produced and under test.

- **Some future steps:**
  - Development of the readout chip;
  - Characterization of the new sensor technology;
  - Design and test of a full-scale hybrid;
  - Validation of the stave cooling system.

Thank you for your attention!

GEFÖRDERT VOM
Bundesministerium für Bildung und Forschung

HGS-HIRe for FAIR
Helmholtz Graduate School for Hadron and Ion Research

JUSTUS-LIEBIG-UNIVERSITÄT GIESSEN

II. Physikalisches Institut