Time-Based Silicon Strip Readout ASIC for the P̄ANDA Detector at FAIR

A. Goerres, V. Di Pietro, A. Riccardi, J. Ritman, A. Rivetti, M. Rolo, T. Stockmanns

A Fast and Low Power Readout ASIC

P̄ANDA Experiment

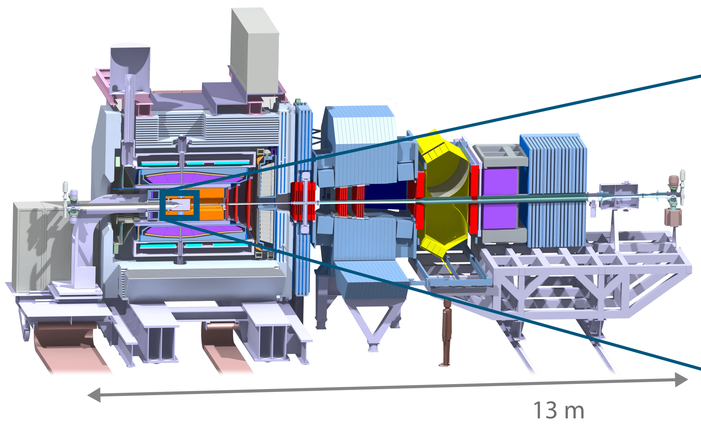

Antiproton **An**nihilation at **Da**rmstadt
Fixed-target, 1.5-15 GeV/c antiproton beam

Micro Vertex Detector (MVD)

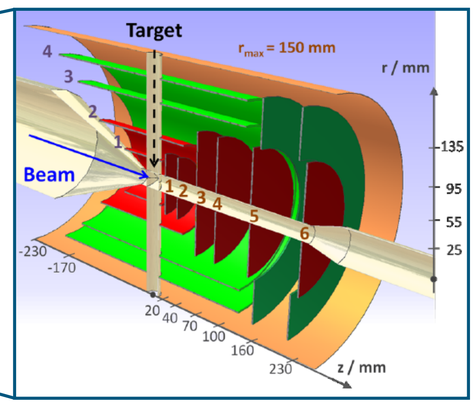

Pixel part
Channel: $10.5 \cdot 10^6$
Readout: ToPix

Strip part
Channel: $0.2 \cdot 10^6$
Readout: PASTA

Front-End Features

• Readout	**Free running**
• High rate	100,000 /s/ch
• Time bin width	50-200 ps
• Charge resol.	8 bit (dyn. range) *
• Low power	< 4 mW/ch *
• Pitch	60 µm/ch
• Channels	64
• Input polarity	pos. & neg.
• Radiation dose	100 kGy *

* Design Goal

The P̄ANDA Strip ASIC (PASTA)

Measurement Concept

Inspired by TOFPET architecture

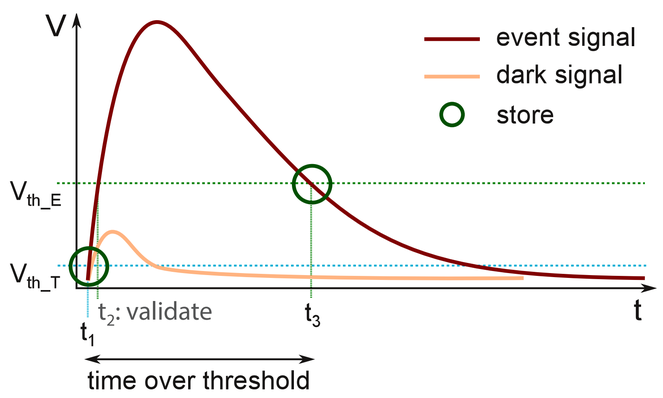

Time Interpolation

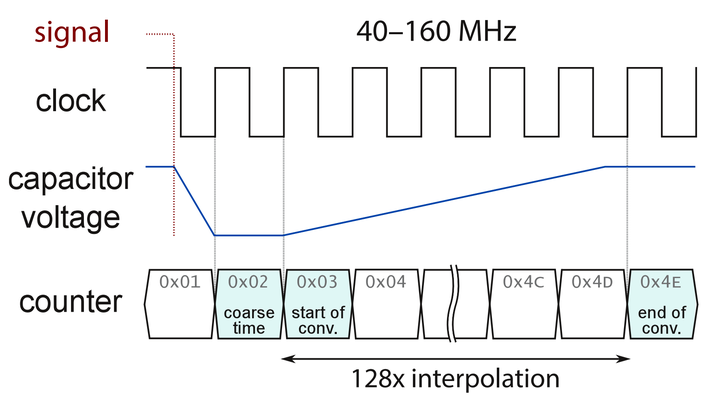

From TOFPET to PASTA

Mandatory

- Input: SiPM → silicon strip
- Power: 8 → 4 mW/ch
- Pitch: 104 µm → 60 µm
- Include radiation hard logic
- Optimize detection efficiency
  → new synchronization chain

General Improvements

- Improve TOT linearity
- Switch to area-optimized technology (+ save development costs)
- Rewrite TDC control logic
- Remove redundancy in data storage

Technology Change

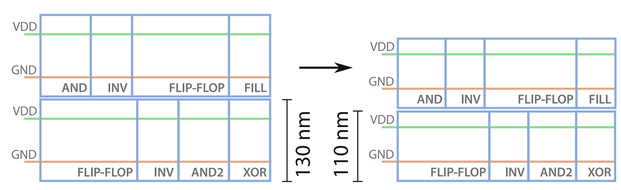

PASTA Optimized Blocks

New TDC Control

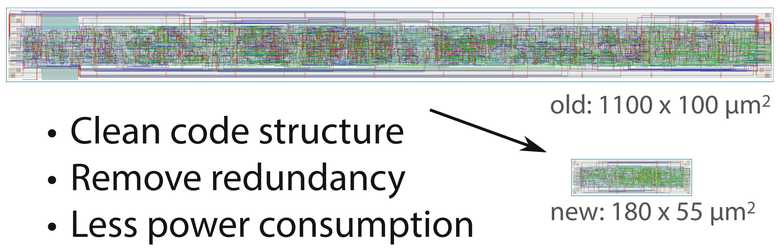

- Clean code structure
- Remove redundancy
- Less power consumption

Radiation Hard Logic

Prevent **S**ingle **E**vent **U**psets (SEU)

- 1 bit: Triple Mode Redundancy
- n bits: Hamming encoding

Synchronization Chain

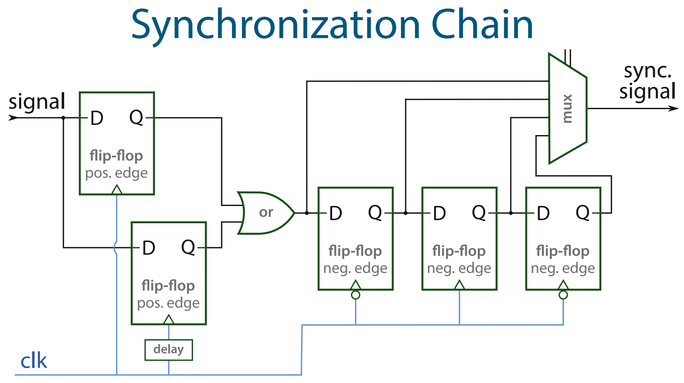

Current Status

TDC Controller

- Second version finished
  - All improvements implemented
  - New code fully functional
- SEU protection of critical components

TDC Control Parameter:

Area [mm²]	
0.11 → **0.01**	(-91%)
Power [mW/ch]	
1.57 → **0.07**	(-95%)

Global Controller

- Adapted to TDC control v2
- Implementation of SEU protection started

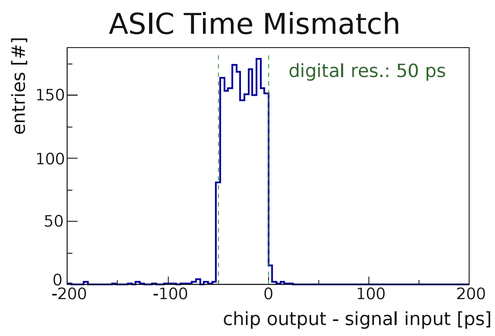

Conclusion & Outlook

Conclusion

- Chip concept adapted to microstrip readout
- Design of digital TDC control simplified
- Area and power consumption reduced

Outlook

- Submit design (this year)
- Labratory and beam measurements
- Possible further developments:
  - Other P̄ANDA sub-detectors
  - Future TOFPET versions

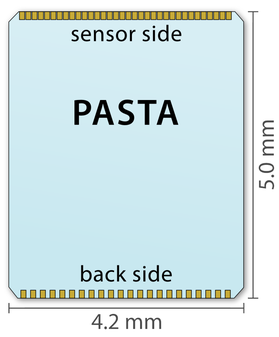

References: [1] M.D. Rolo *et al.*, TOFPET ASIC for PET applications, *2013 JINST 8 C02050*
[2] PANDA collaboration, Technical Design Report for the: PANDA Micro Vertex Detector

PASTA is a joint development of:
University Gießen
Forschungszentrum Jülich
INFN Torino