Study of system integration for the pixel detector of the $\bar{P}$anda experiment

Calvo, Coli, De Remigis, Giraudo, Mazza, Mignone, Wheadon
INFN Torino

Wit, INFN, Pisa, 2012

The Micro Vertex Detector (MVD) is the innermost one in the antiProton ANnihilation at DArmstadt ($\bar{P}$anda) experiment. It features 4 coaxial barrels (two with hybrid pixel sensors at small radii and two with strip sensors), and 6 forward disks (all with hybrid pixels and the last two completed by strips). The cylindrical structure shows a diameter of about 300 mm, and an overall length of 460 mm. The detector aims to the vertex reconstruction with a spatial resolution better than 100 µm, and to the momentum measurement. Globally there are about 10 M channels of pixel, and 200 k channels of strip.

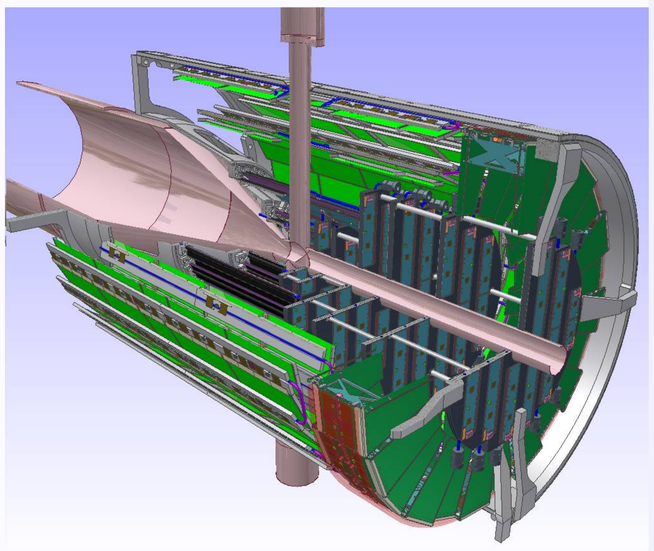

Due to particles with low momentum down to 150 MeV/c, the material budget is very limited. With respect to the radiation length, it must be hold down to a value of 10% including all the parts making up the detector (sensor, support, cabling, ..) in every direction from the interaction point. The simulation shows that the main component affecting the material budget is the cabling (38%). For that reason the actual layout foresees that the interconnections are made in aluminium instead of standard copper, that have a radiation length respectively of 89 and 14 mm.

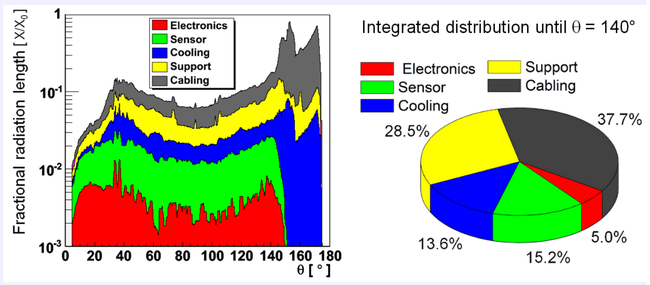

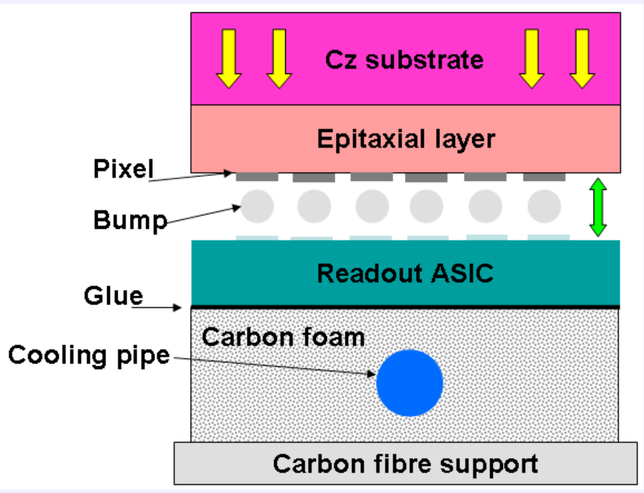

The hybrid technology was chosen for the pixel layers, due to the high radiation tolerance required for a total fluence of about $1 \cdot 10^{14}$ n_{1MeVeq}/cm^2 relatively to a lifetime of 10 years (50% duty cycle). The sensor is implemented in the epitaxial silicon grown on a Czochralski layer, to obtain a low depletion voltage (about 10 V). The pixel covers an area of 100 × 100 µm^2, and it is connected to the readout by bump bonding technique. The circuit is then glued on the carbon foam, which has a high thermal conductivity, for helping the dissipation.

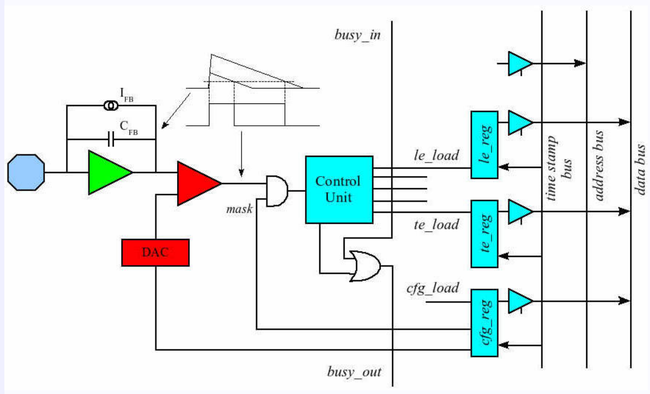

The current prototype for the readout circuit (Topix) is designed in a 130 nm Cmos technology, and it is able to run in a triggerless system. The circuit features an energy loss measurement with a 12 bits resolution by the TOT technique, over an input range from 1 to 50 fC. Topix is working with a 155.5 MHz clock, and it is able to deal at least with a $6 \cdot 10^6$ hit/(cm^2 s) event rate. A noise level of about 0.03 fC was measured, and the circuit was proven to be radiation hard well above the required 100 kGy TID.

The present Topix version features 640 pixel cells, arranged in short columns (32 cells) and long columns (128 cells). The circuit is a prototype of 4.5 × 4 mm^2, but it is provided of the peripheral electronics needed for the columns readout. All the registers were implemented with a SEU protection methods, as the triple redundancy or the Hamming code. The event information are sent out by an SLVS serial port, with a 156 Mb/s data rate.

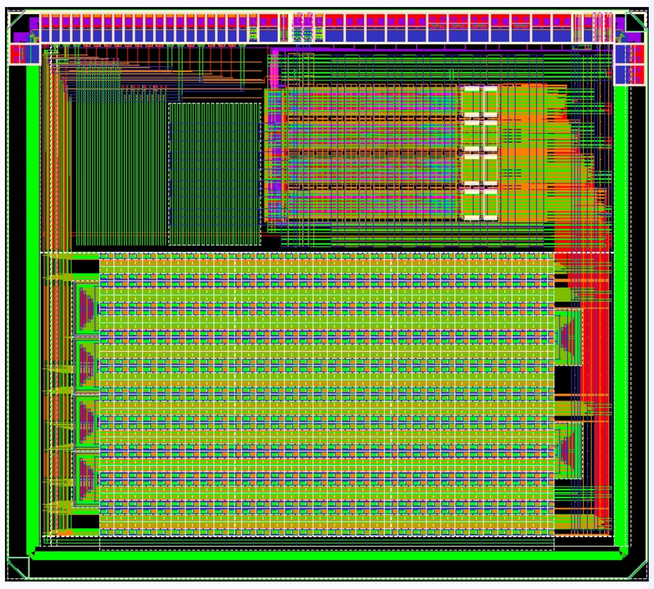

The CSA produces a triangular shaped signal which base is proportional to the input charge. This waveform feeds a comparator, and it is crucial to reduce the baseline spread. A DAC has been introduced to allow an equalization, on a channel by channel basis. Due to the process parameter distribution a baseline standard deviation of 5 mV has been noticed but, after the correction, it has been cut below than 700 µV.

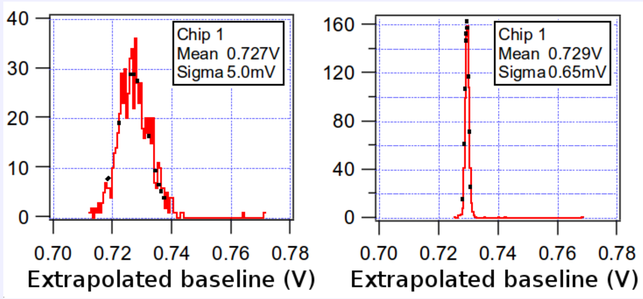

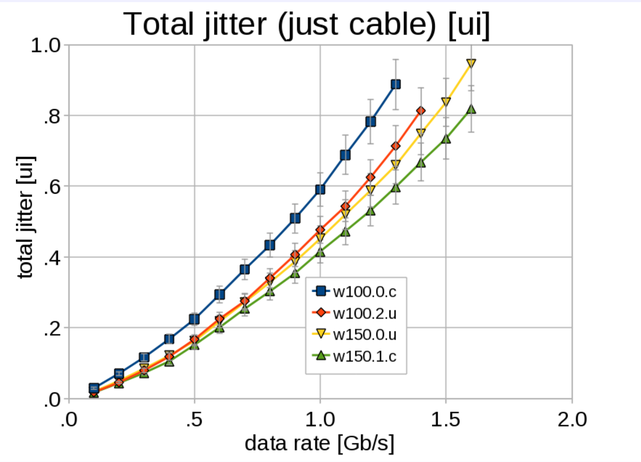

To cope with the low material budget, an aluminium cable was developed for the data from the Topix circuits. The current samples are made of 18 differential pairs, with tracks 1 m long and width of 100 and 150 µm. The total jitter was measured and the threshold value of about 0.3 UI is reached with a data rate of 600 Mb/s; at present a new prototype 1.5 m long has been delivered.

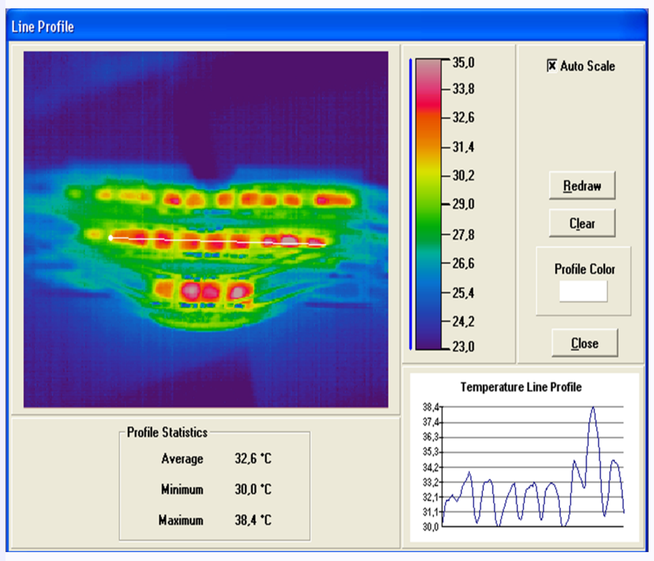

The whole MVD system dissipates around 1.4 kW and the chosen cooling solution is composed by a water circuit, working below the atmospheric pressure to avoid leaks. For the evaluation of the cooling performance, a set of dummy circuits for a global power of 94 W were glued on the half disk prototype, reaching the surface temperature of 34° C in agreement with the simulation.

The carbon foam is very interesting for the MVD cooling system, but its behaviour under irradiation has to be investigated. For that reason an irradiation test was performed at the Lena nuclear reactor in Pavia, up to a total fluence of about $2 \cdot 10^{15}$ n_{1MeVeq}/cm^2. The result shows a small change of the thermal conductivity, around the 10% with respect to the initial value.

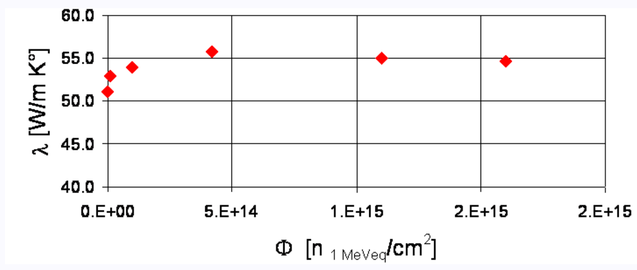

A beam test has been performed to check the present prototypes at the Forschungszentrum Jülich, with a proton beam at about 3 GeV/c momentum. The setup foreseen a simple telescope made of 4 pixel sensors, while the data acquisition was implemented by a set of FPGA. From the beam spot, the bump bonding process has been evaluated with an inefficiency of about $3 \cdot 10^{-3}$.

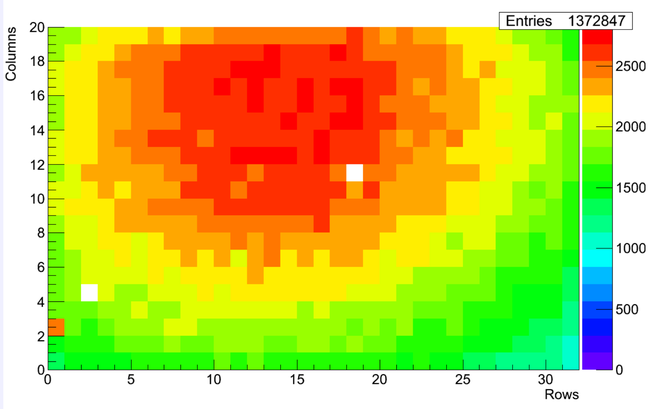

De Remigis