The P̄ANDA Strip ASIC (PASTA)

HK21.3 A Free-Running Readout ASIC for Silicon Strip Sensors in P̄ANDA

André Goerres for the P̄ANDA Collaboration

18 March 2014

DPG-Frühjahrstagung (Frankfurt), HK21 – Instrumentation

Mitglied der Helmholtz-Gemeinschaft

P̄ANDA Experiment

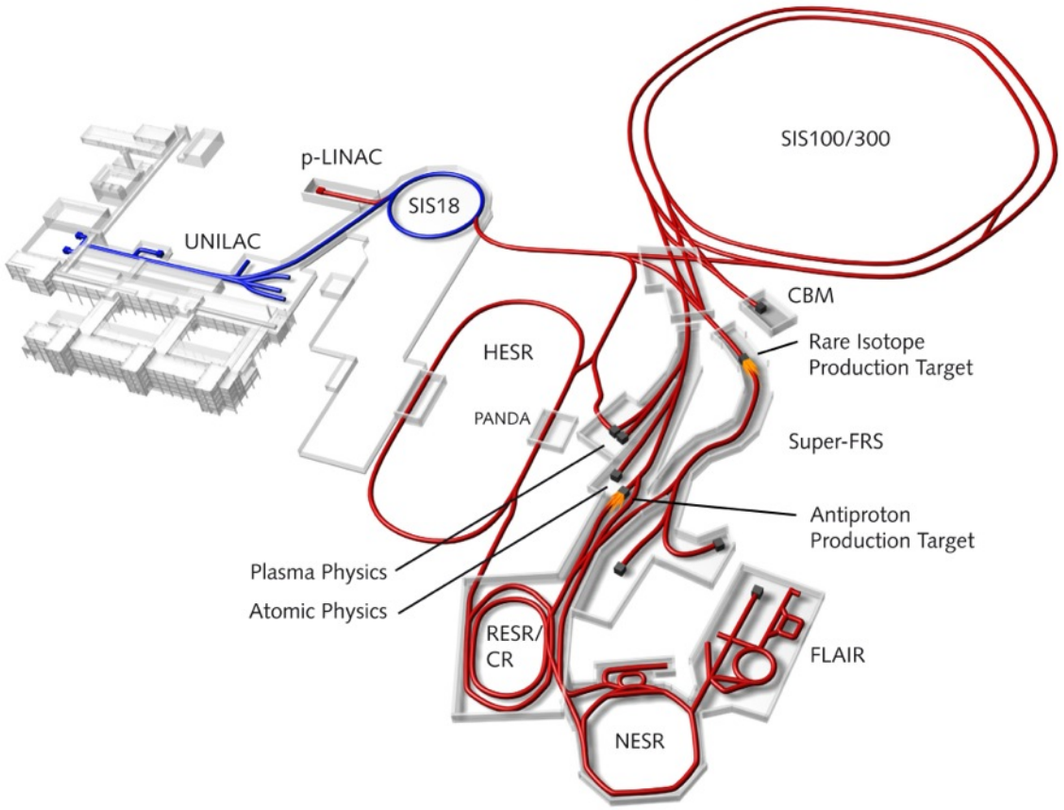

FAIR

Facility for **A**ntiproton and **I**on **R**esearch

Mitglied der Helmholtz-Gemeinschaft

P̄ANDA Experiment

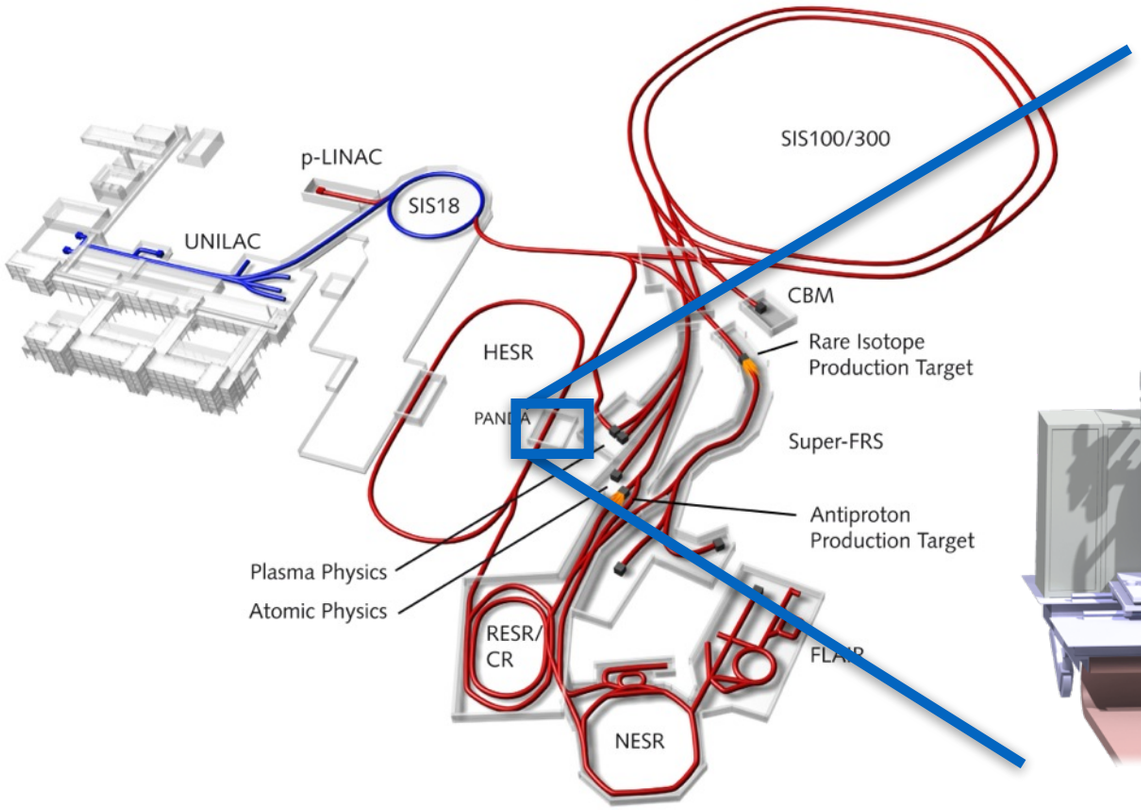

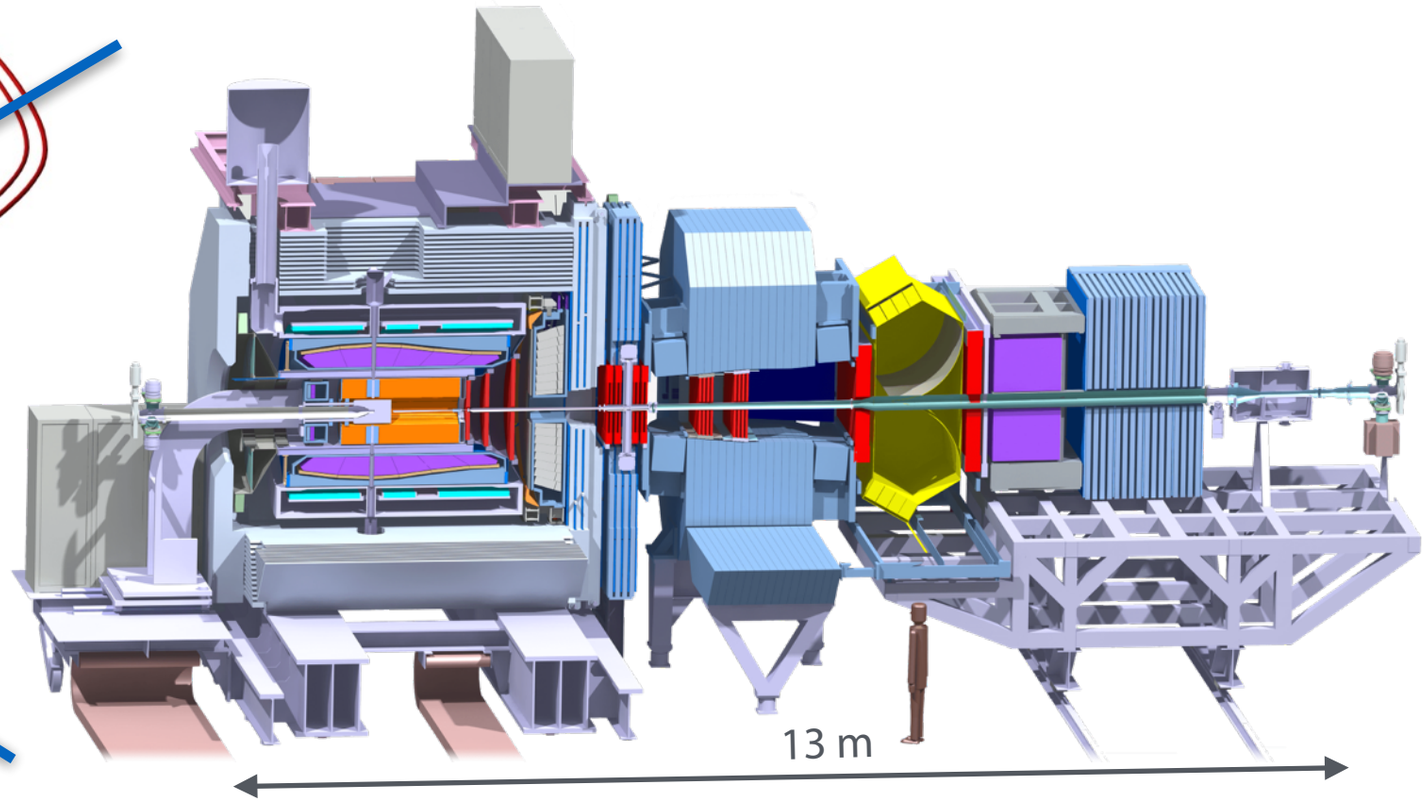

FAIR
Facility for Antiproton and Ion Research

P̄ANDA
Antiproton Annihilation at Darmstadt

- P̄ANDA: $\bar{p}p$ collisions with 1.5–15 GeV/c
  - $2 \cdot 10^7$ collisions per second
  - Event taking without hardware trigger

Mitglied der Helmholtz-Gemeinschaft

Readout of MVD Silicon Strip Sensors

- **M**icro **V**ertex **D**etector, innermost tracker
  - Silicon pixel ($10.5 \cdot 10^6$ channels)
  - Silicon strips ($0.15 \cdot 10^6$ channels)

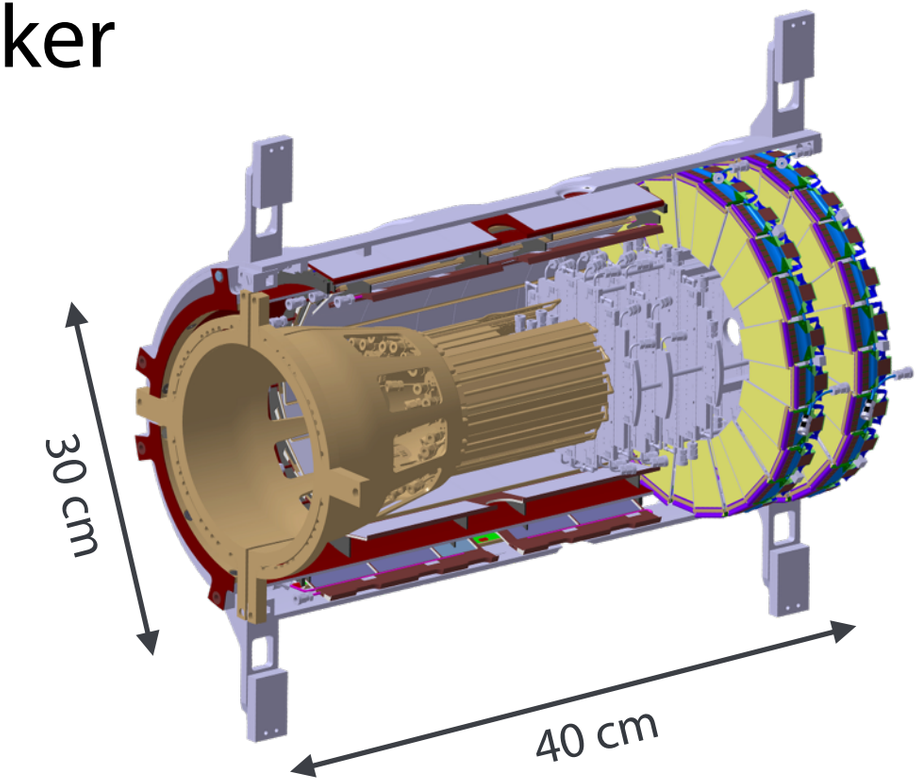

- Demanding readout requirements
  - Autonomous data taking (*free running*)
  - High rate capability (*40,000 hits/s/ch*)
  - Accurate time information (*< 10 ns*)
  - Deposited charge (*8 bit dynamic range*)
  - Low power consumption (*< 4 mW/ch*)

- Readout with **PA**NDA **St**rip **A**SIC (PASTA)

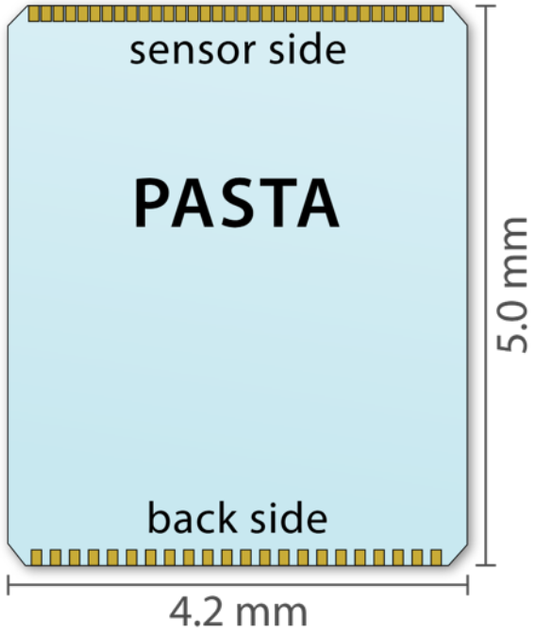

Mitglied der Helmholtz-Gemeinschaft

Measurement Concept

- Free-running, time-based readout of silicon strips
  - Timestamp (50-200 ps)
  - Time over threshold

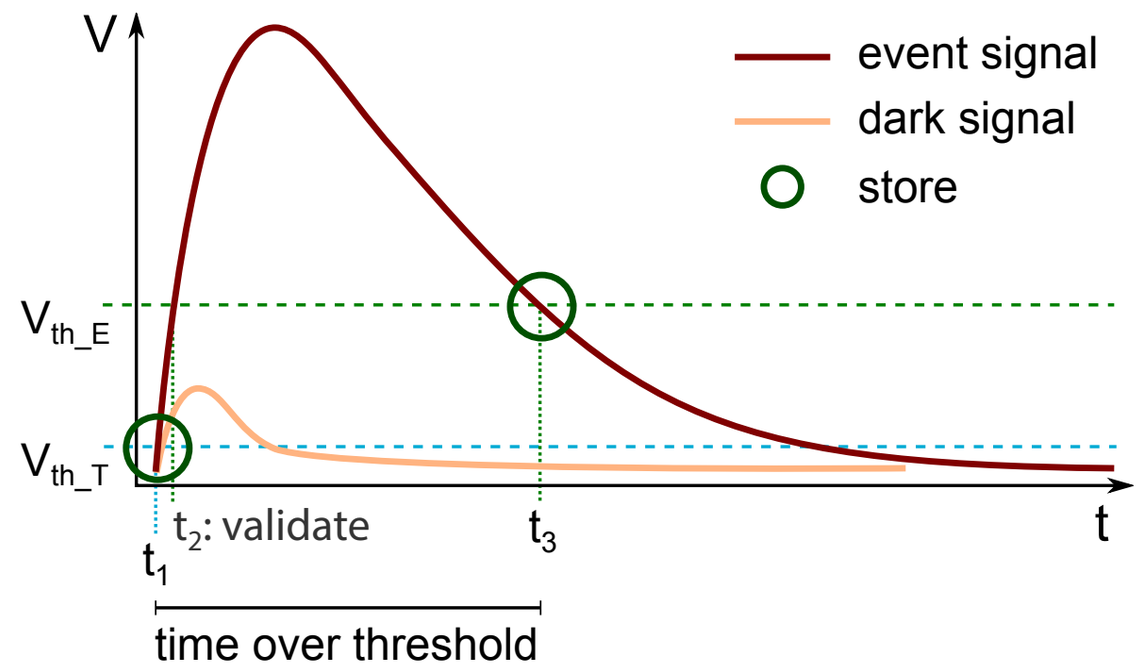

- Two TDCs per channel
  - Time and energy branch (low and high threshold)
  - Energy trigger* (t_2) validates time trigger* (t_1)
  - Reduces susceptibility to dark counts

* **trigger:** ASIC internal signal to start readout

- Concept based on TOFPET ASIC
  - Developed for medical application
  - Readout of SiPM

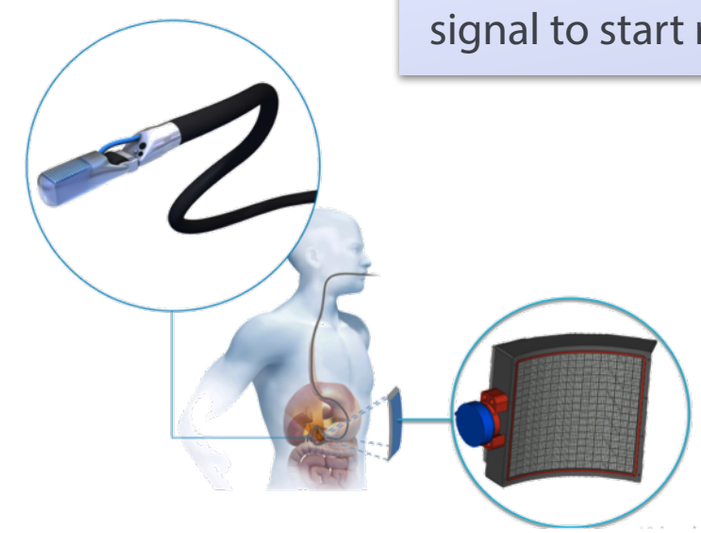

Mitglied der Helmholtz-Gemeinschaft

Components in the ASIC

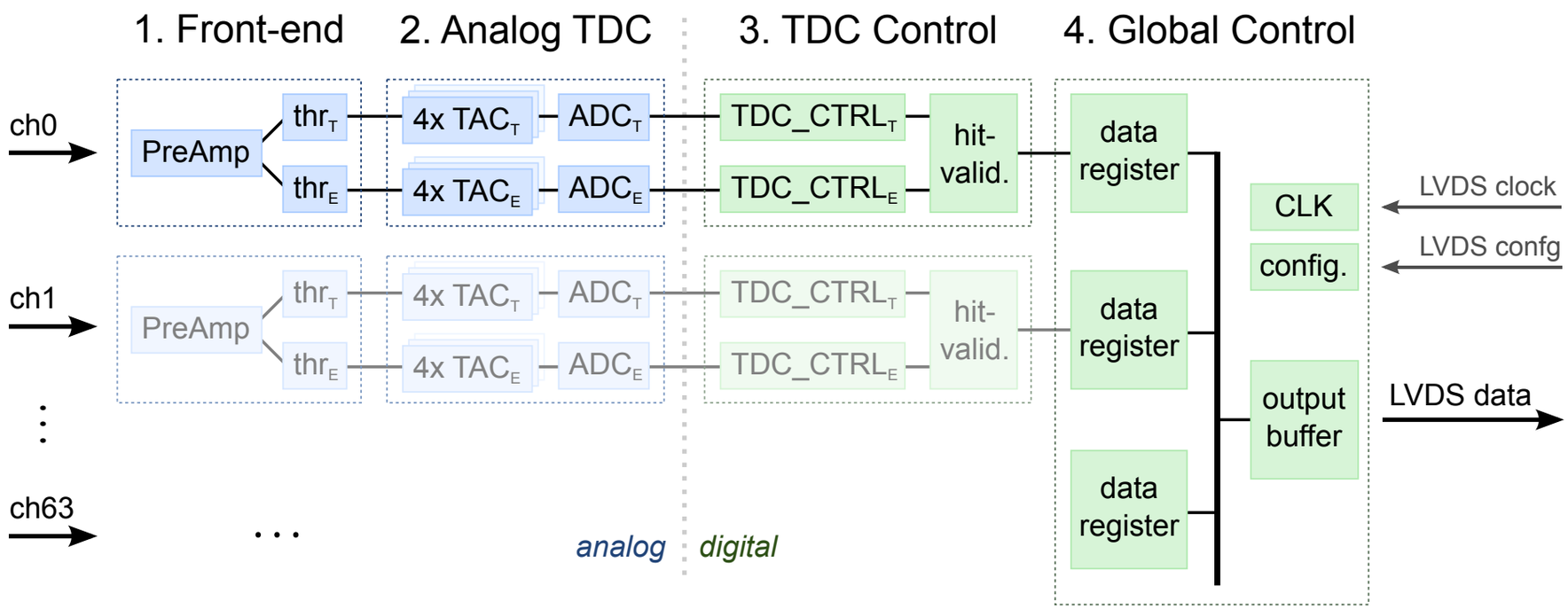

1. Amplification & discrimination
2. Time interpolation, Wilkinson ADC
3. Control charging & initiate storing
4. Handling configuration & channel data

Mitglied der Helmholtz-Gemeinschaft

Components in the ASIC

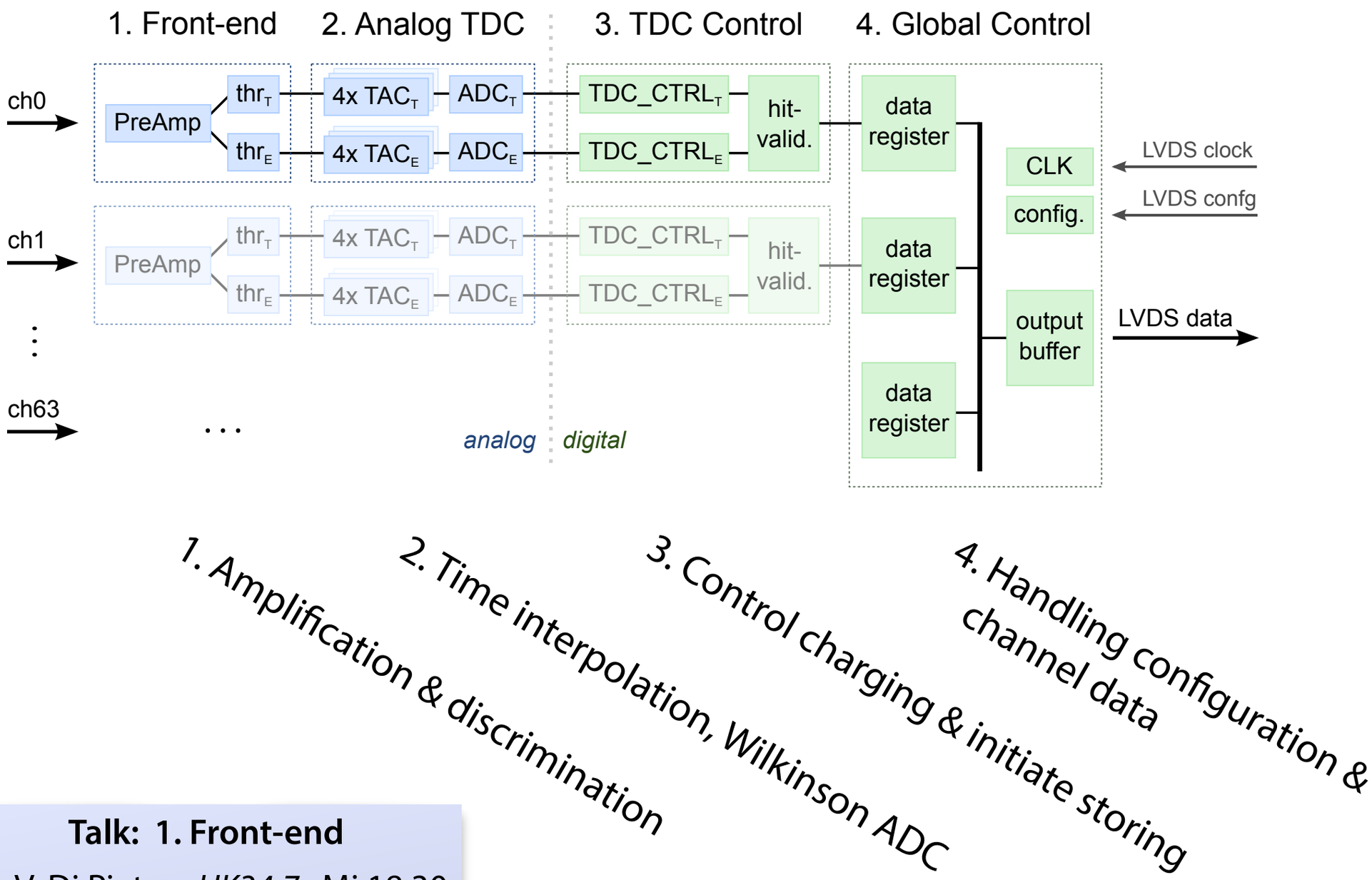

Talk: 1. Front-end

→ V. Di Pietro, *HK34.7*, Mi 18:30

Talk: 2. Analog TDC

→ A. Riccardi, *HK6.1*, Mo 14:00

Mitglied der Helmholtz-Gemeinschaft

Components in the ASIC

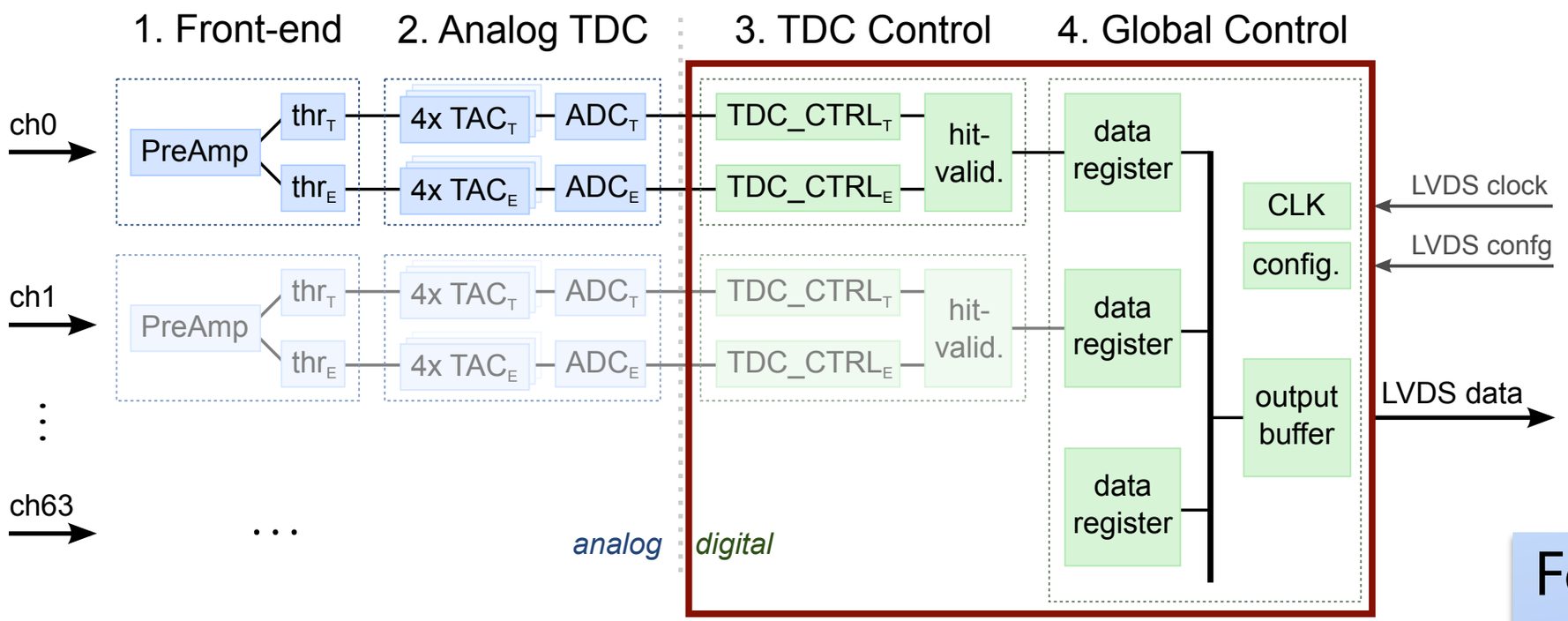

Focus of this talk:
digital part

1. Amplification & discrimination

2. Time interpolation, Wilkinson ADC

3. Control charging & initiate storing

4. Handling configuration & channel data

Talk: 1. Front-end

→ V. Di Pietro, *HK34.7*, Mi 18:30

Talk: 2. Analog TDC

→ A. Riccardi, *HK6.1*, Mo 14:00

Mitglied der Helmholtz-Gemeinschaft

From TOFPET to PASTA

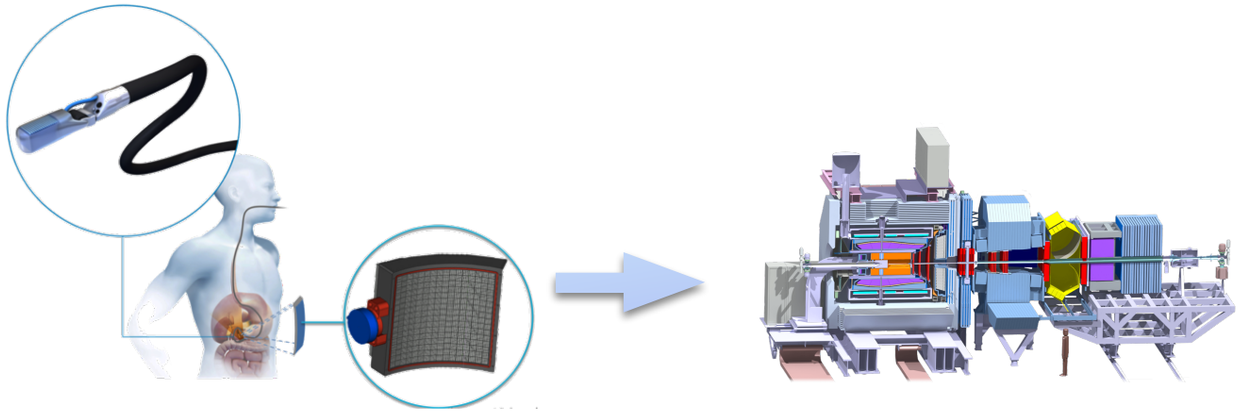

	TOFPET ASIC v1	PANDA Strip ASIC
Input capacitance/charge	**SiPM** → 320 pF / 300 pC	**silicon strips** → 50 pF / 38 fC
Power consumption	7-8 mW/ch	< 4 mW/ch
Channel pitch	104 µm	60 µm
Radiation protection	n/a	100 kGy
Efficiency gap	~ 6% event loss	no event loss
Charge resolution	less important	8 bit dyn. range

Additional changes:

- Switch to area optimized technology
- Rewritten TDC control logic

Mitglied der Helmholtz-Gemeinschaft

New TDC Control

Rewritten TDC control code with major simplification:

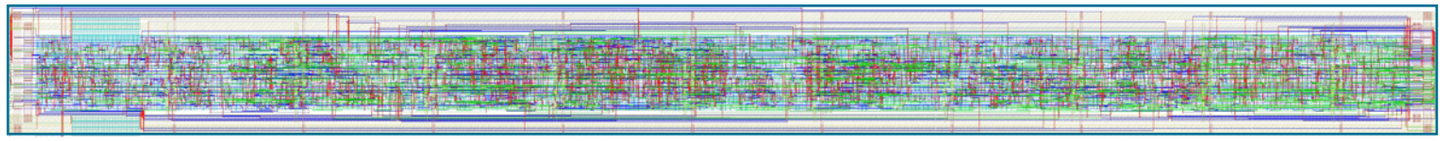

old: 1100 x 100 µm²

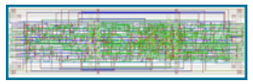

new: 180 x 55 µm²

	TDC_CTRL v1 tech. A	TDC_CTRL v1 tech. B	TDC_CTRL v2 tech. B
Occupancy (1.1 x 0.1 mm	84.8 %	37.0 %	7.2 %
Cells	3155	2850	351
Power (@ 160 MHz)	1.57 mW/ch	1.78 mW/ch	0.08 mW/ch

technology change new TDC control

MVD req.
104→60 µm pitch
8→4 mW/ch

Mitglied der Helmholtz-Gemeinschaft

New TDC Control

Rewritten TDC control code with major simplification:

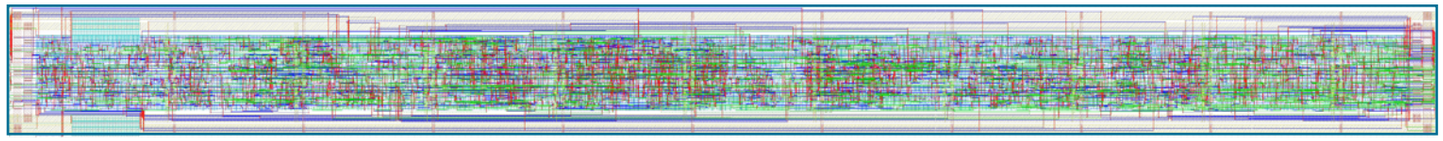

old: 1100 x 100 µm²

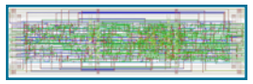

new: 180 x 55 µm²

	TDC_CTRL v1 tech. A	TDC_CTRL v1 tech. B	TDC_CTRL v2 tech. B
Occupancy (1.1 x 0.1 mm	84.8 %	37.0 %	7.2 %
Cells	3155	2850	351
Power (@ 160 MHz)	1.57 mW/ch	1.78 mW/ch	0.08 mW/ch

technology change new TDC control

MVD req.
104→60 µm pitch
8→4 mW/ch

⇒ Improvements to meet MVD requirements

Mitglied der Helmholtz-Gemeinschaft

Radiation Damage

Charge deposition in electronics can lead to:

- **Hard errors**
  - Permanent damage
  - Destruction of gates
- **Soft errors**
  - Effects only temporary
  - Single Event Upsets (SEU)
    - Change a value inside a flip-flop
    - Causes unexpected behavior

Mitglied der Helmholtz-Gemeinschaft

Single Event Upset

Example: a fictional readout control

Normal operation

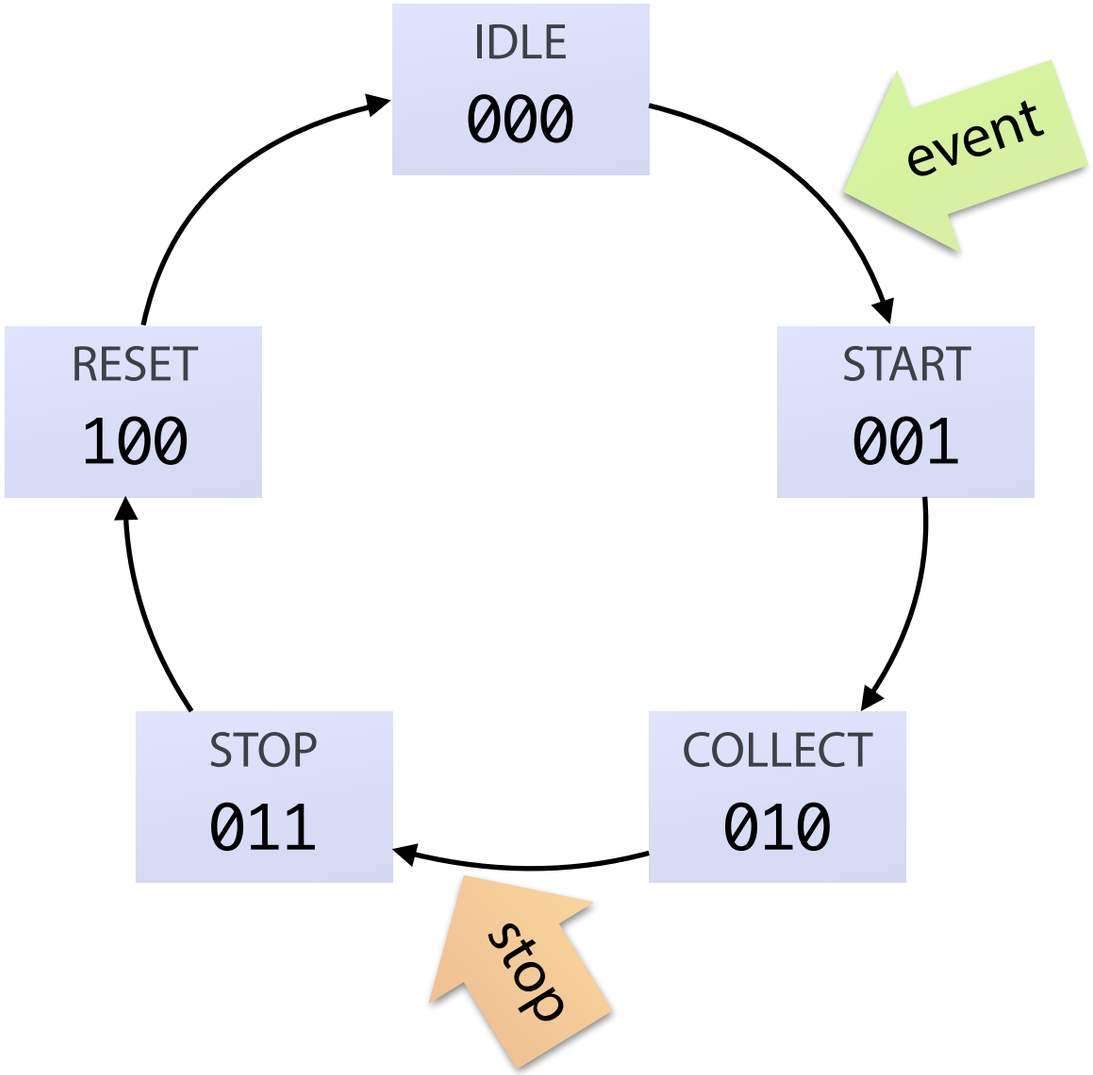

Mitglied der Helmholtz-Gemeinschaft

Single Event Upset

Example: a fictional readout control

Radiation environment

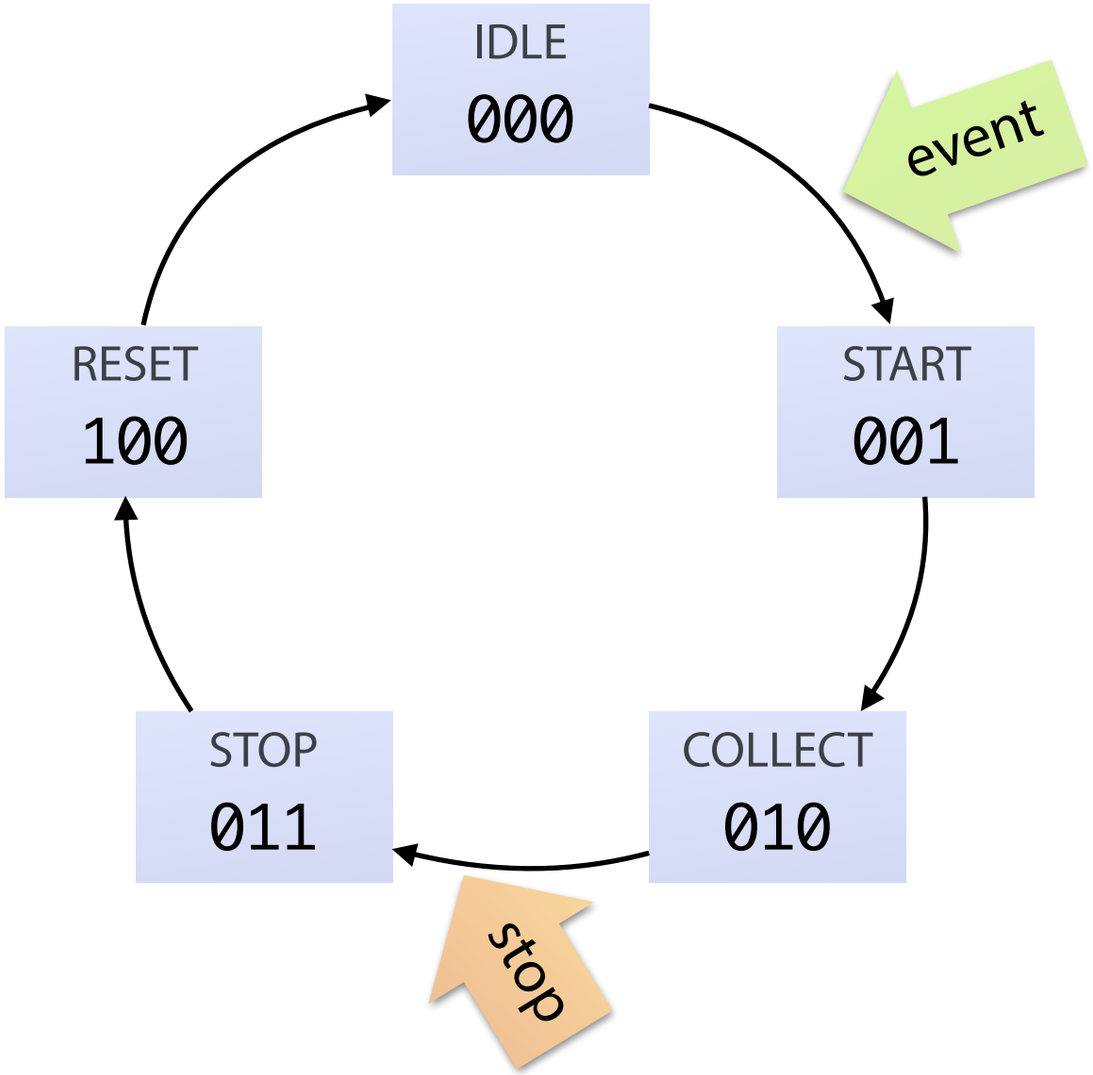

Mitglied der Helmholtz-Gemeinschaft

Single Event Upset

Example: a fictional readout control

Radiation environment

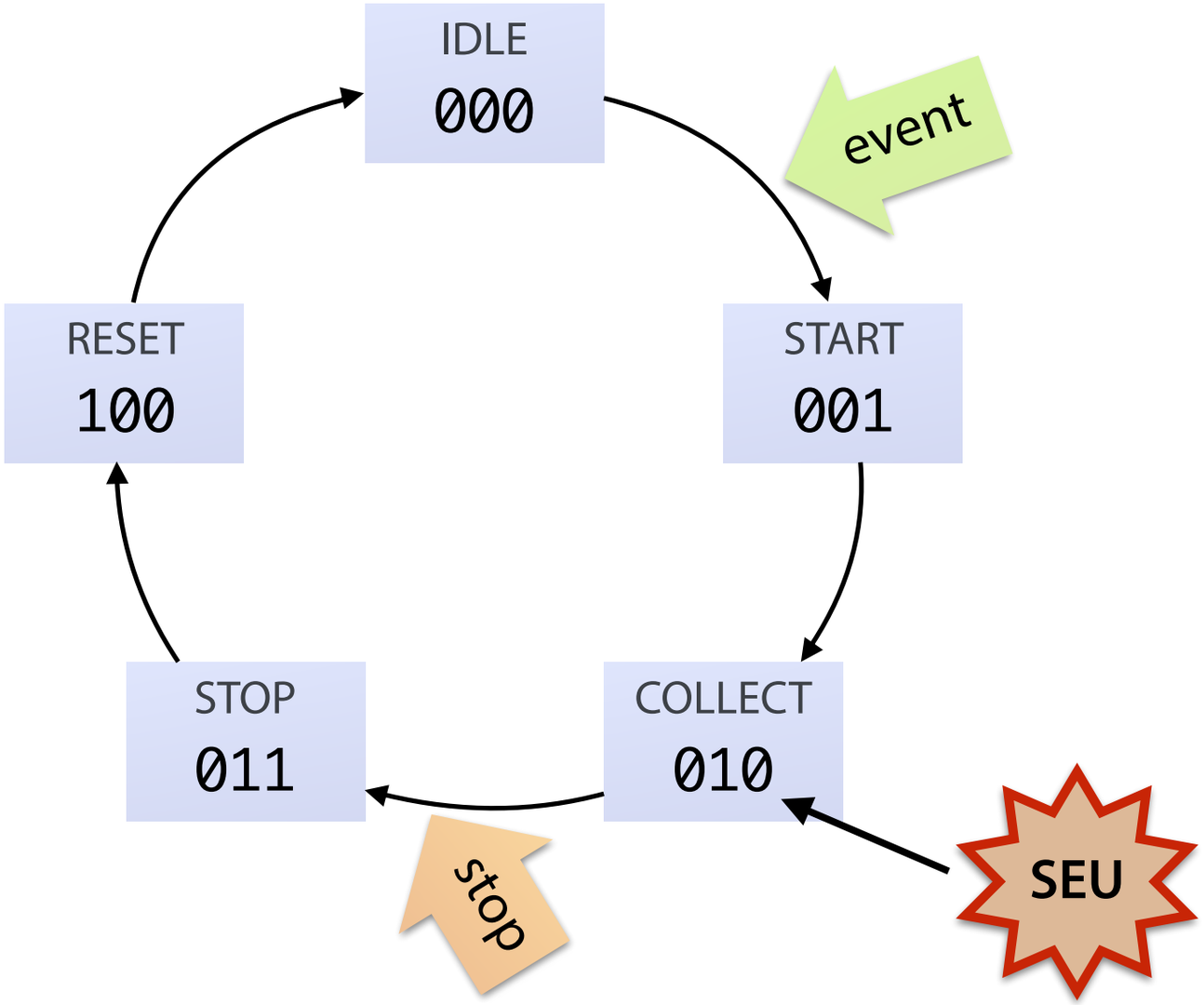

Mitglied der Helmholtz-Gemeinschaft

Single Event Upset

Example: a fictional readout control

Radiation environment

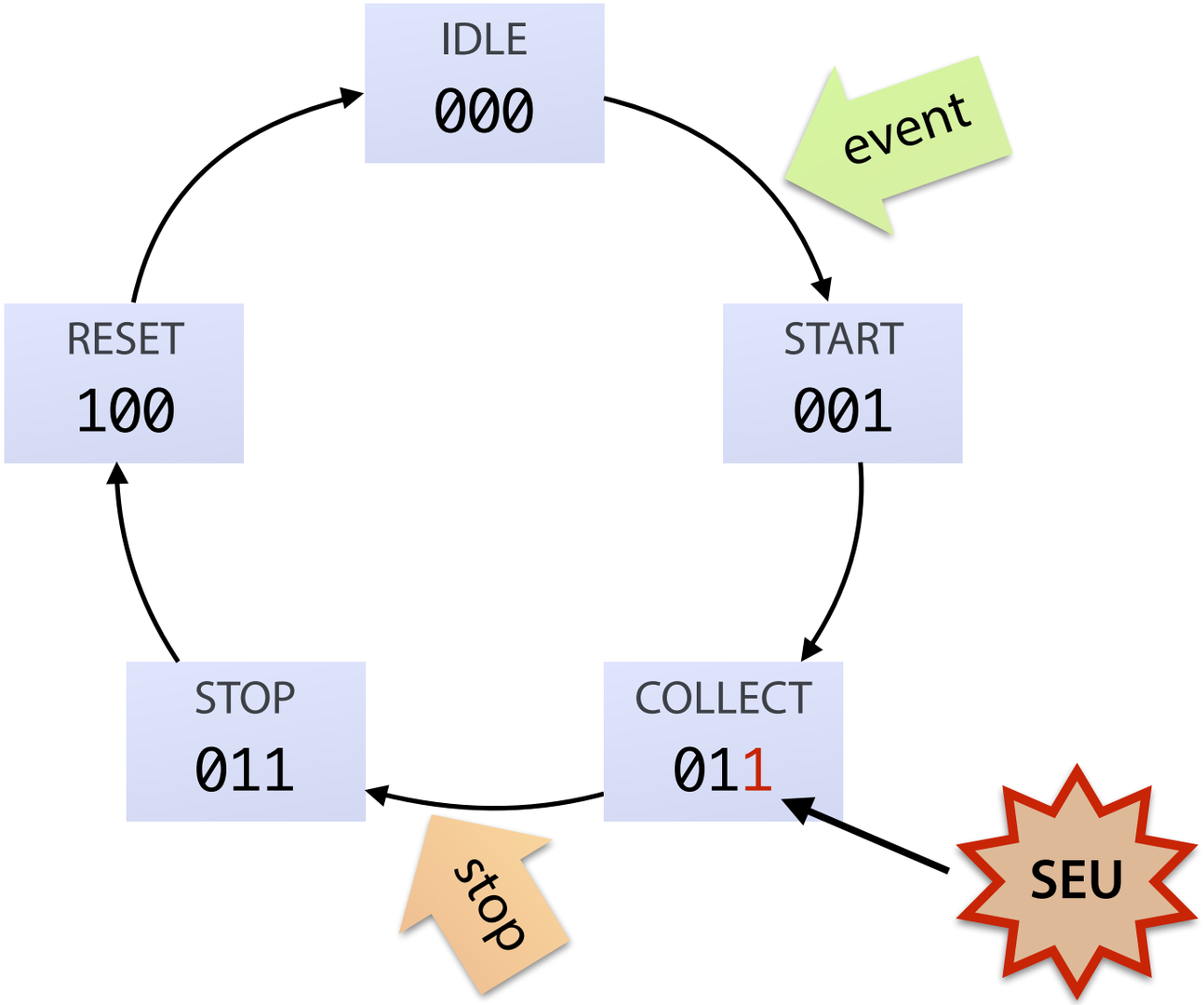

Mitglied der Helmholtz-Gemeinschaft

Single Event Upset

Example: a fictional readout control

Radiation environment

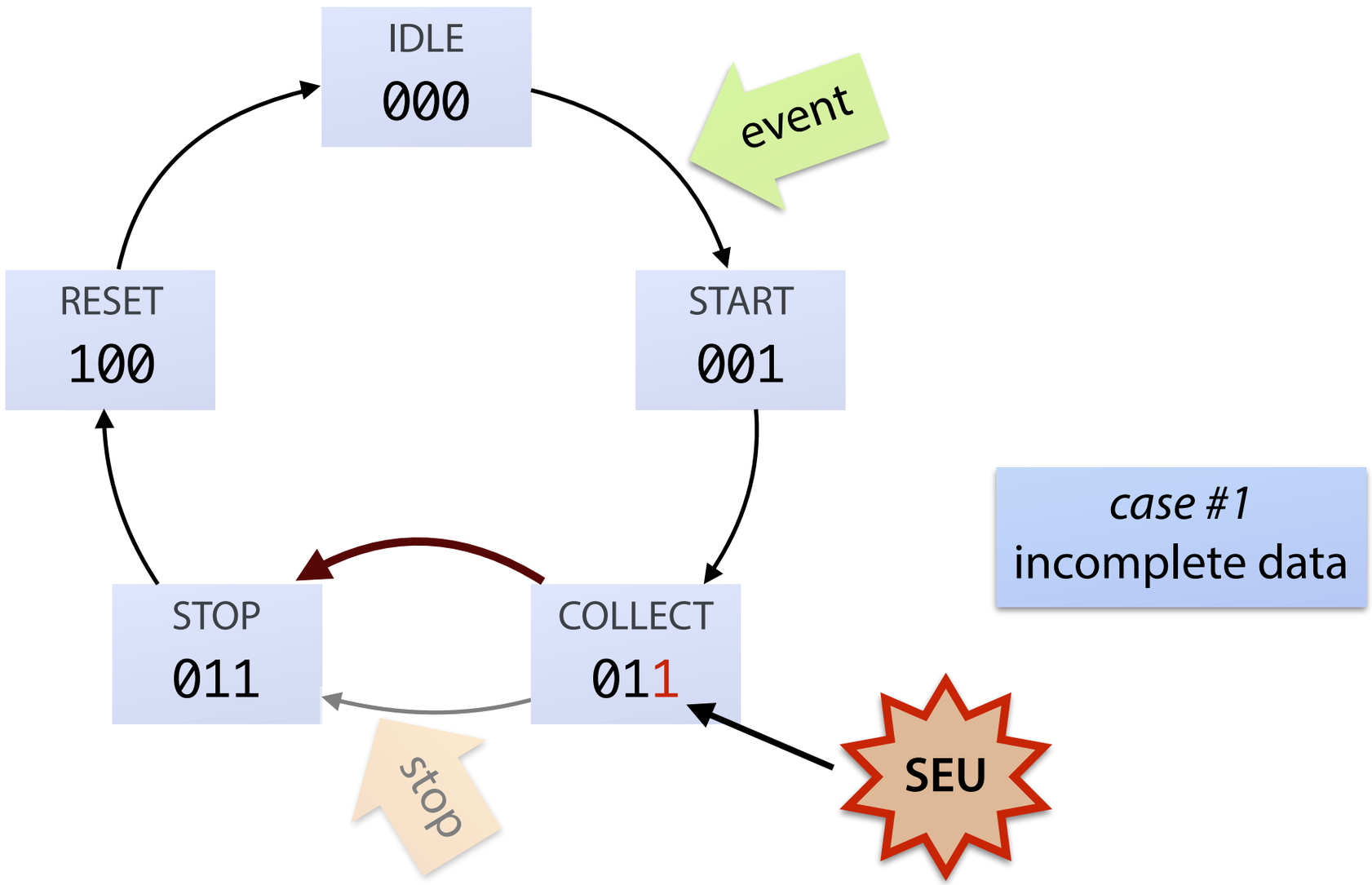

Mitglied der Helmholtz-Gemeinschaft

Single Event Upset

Example: a fictional readout control

Radiation environment

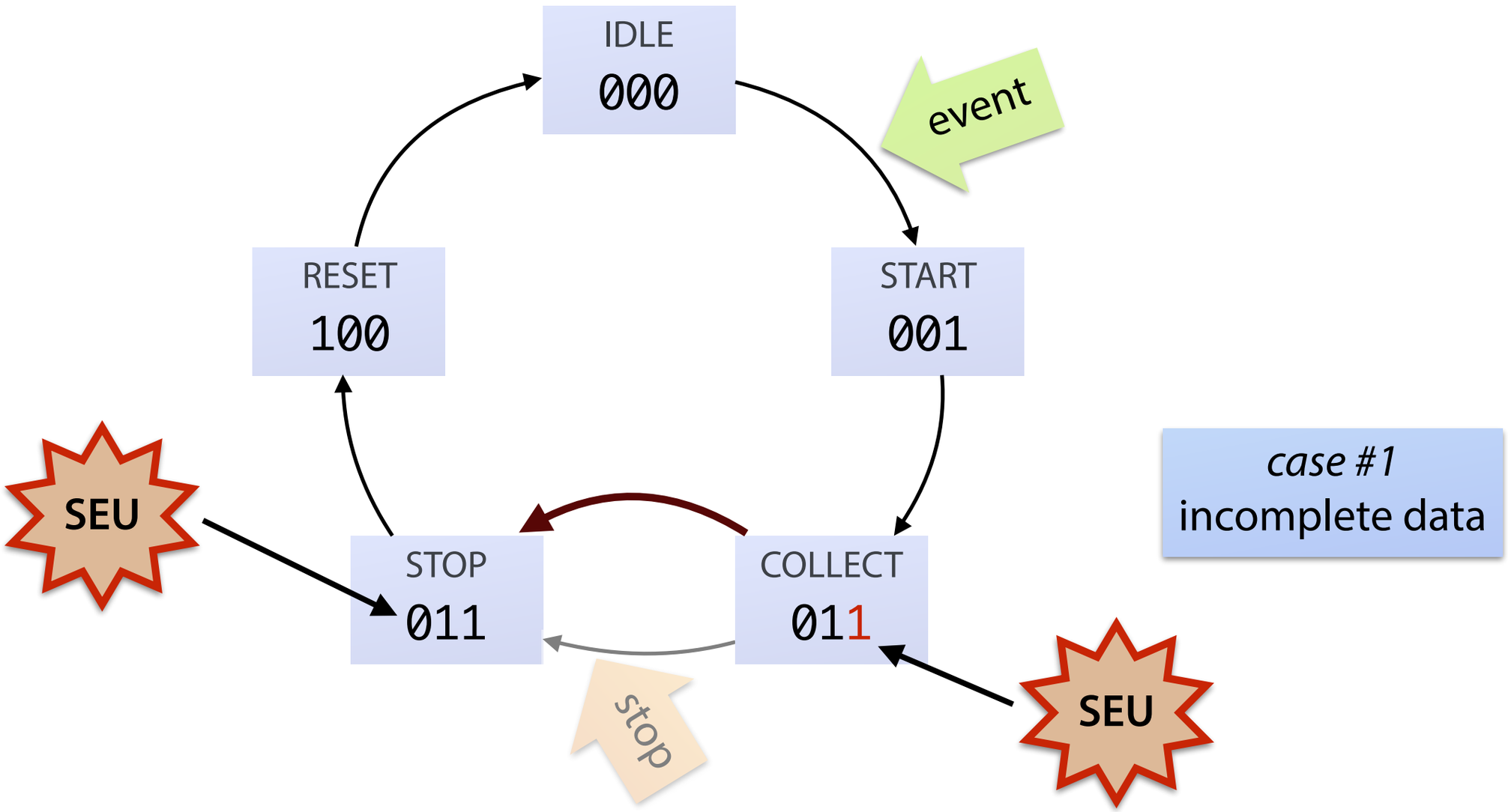

Mitglied der Helmholtz-Gemeinschaft

Single Event Upset

Example: a fictional readout control

Radiation environment

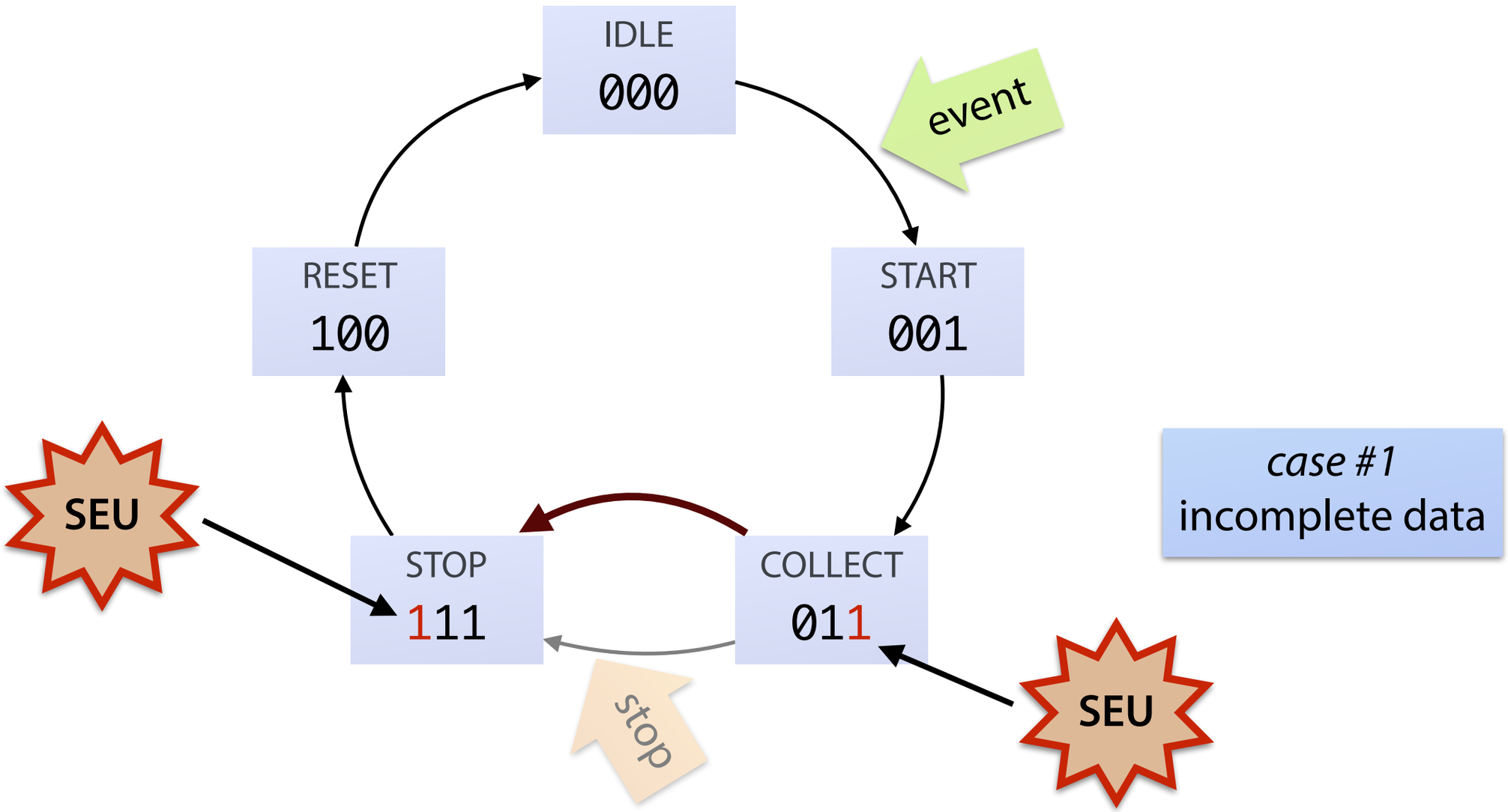

Mitglied der Helmholtz-Gemeinschaft

Single Event Upset

Example: a fictional readout control

Radiation environment

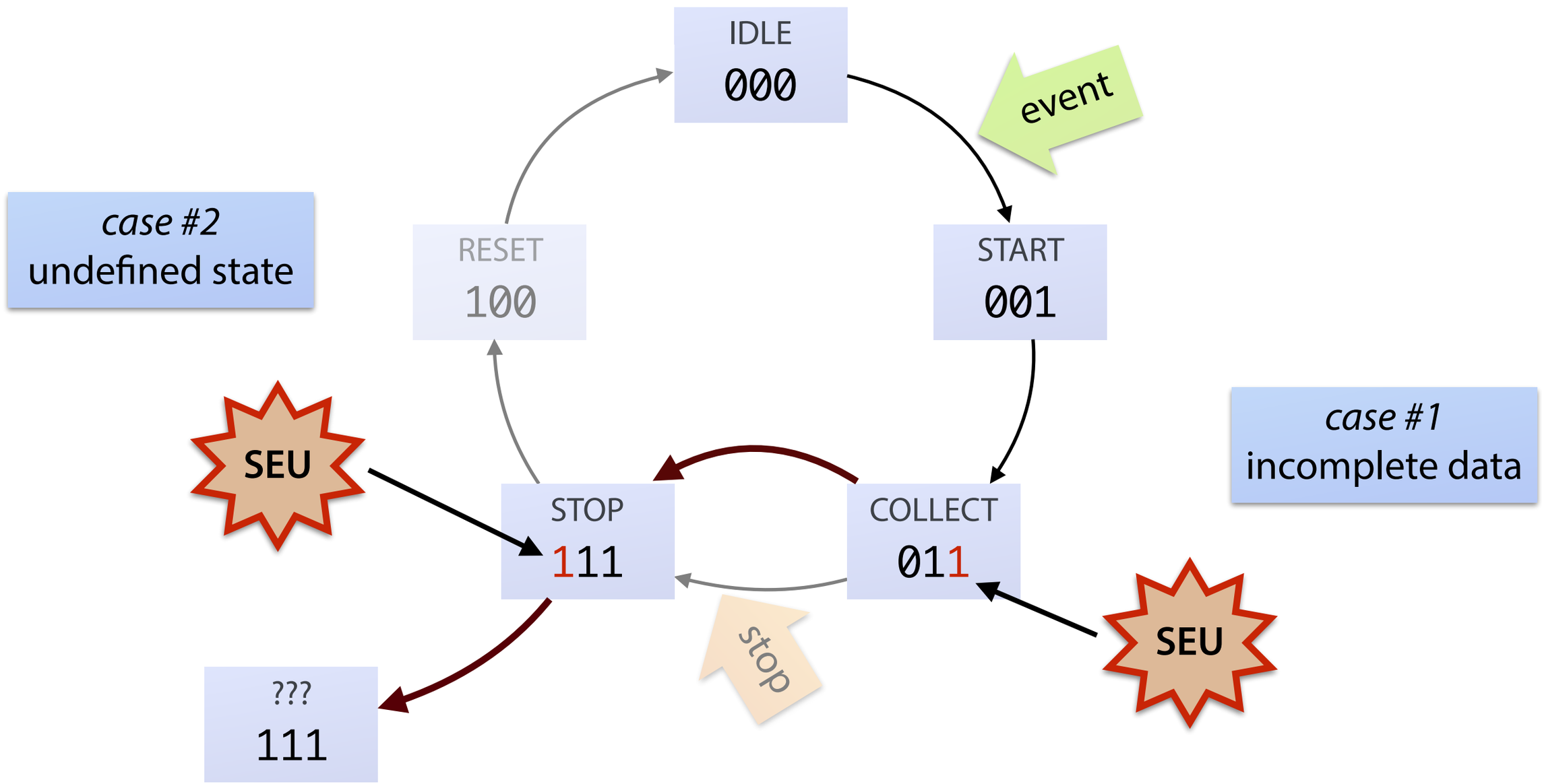

Mitglied der Helmholtz-Gemeinschaft

Prevent Logic Freeze

- **Single bit** (e.g. control signal)
  - Triple Mode Redundancy (TMR)

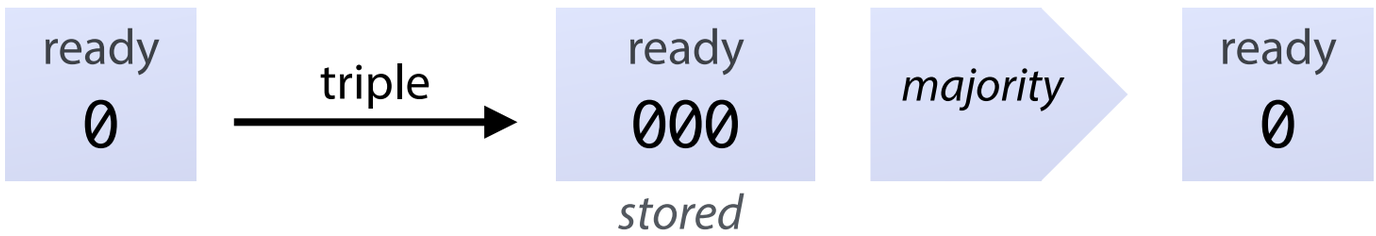

Mitglied der Helmholtz-Gemeinschaft

Prevent Logic Freeze

- **Single bit** (e.g. control signal)
  - Triple Mode Redundancy (TMR)

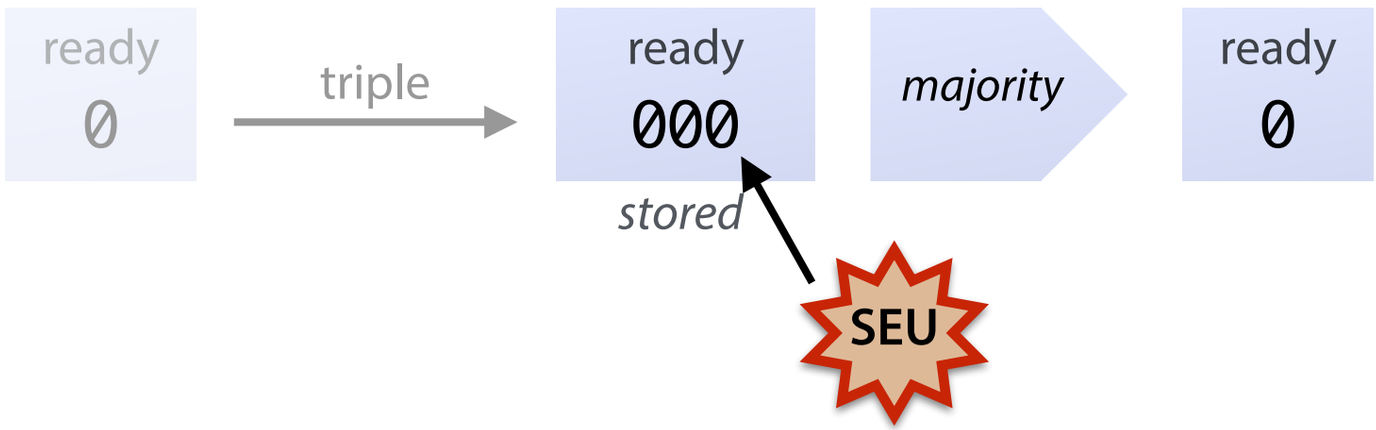

Mitglied der Helmholtz-Gemeinschaft

Prevent Logic Freeze

- **Single bit** (e.g. control signal)
  - Triple Mode Redundancy (TMR)

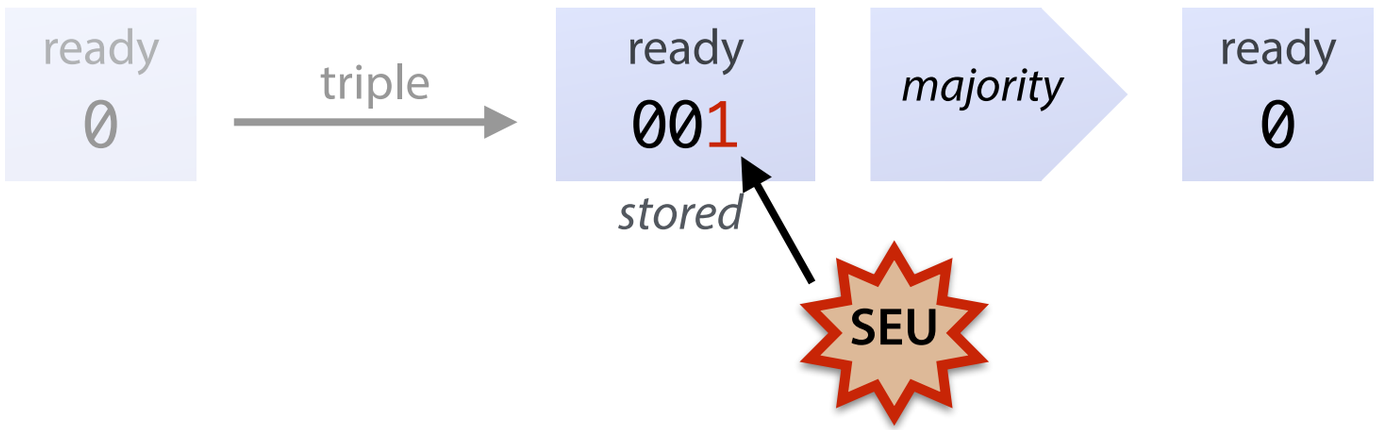

Mitglied der Helmholtz-Gemeinschaft

Prevent Logic Freeze

- **Single bit** (e.g. control signal)
  - Triple Mode Redundancy (TMR)

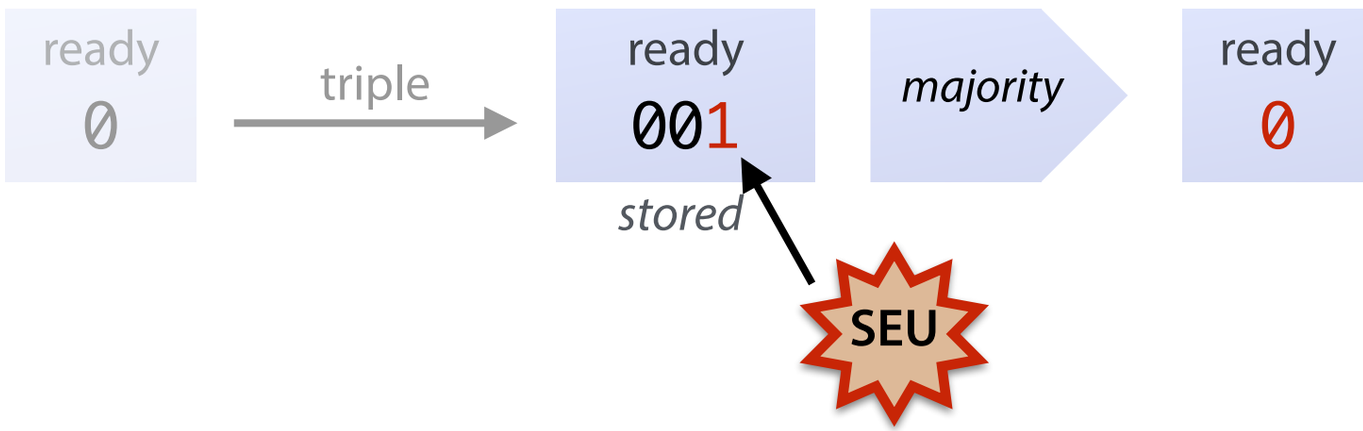

Mitglied der Helmholtz-Gemeinschaft

Prevent Logic Freeze

- **Single bit** (e.g. control signal)
  - Triple Mode Redundancy (TMR)

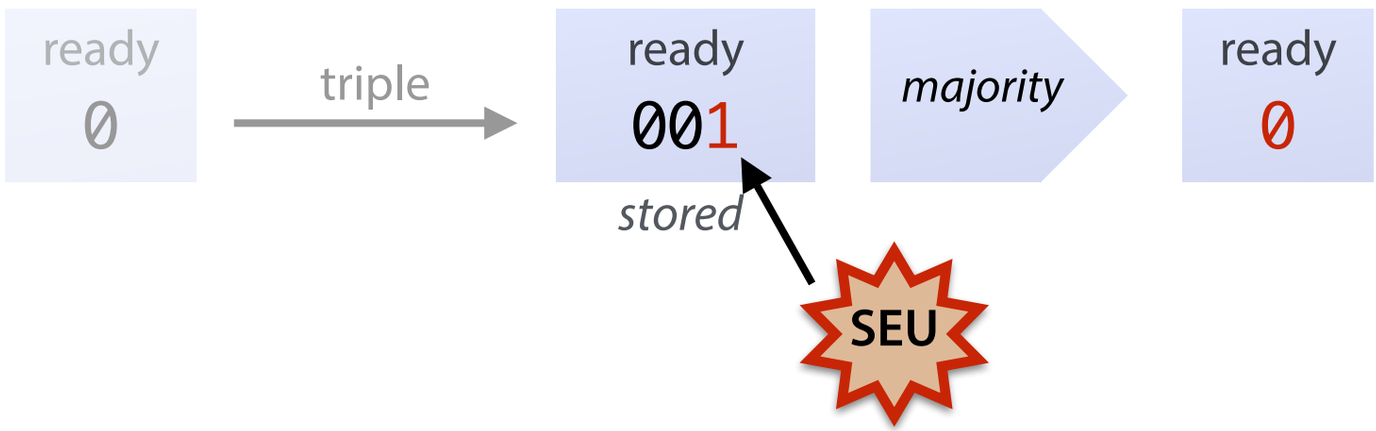

- **Multiple bit** (e.g. state machine, configuration)
  - Hamming encoding

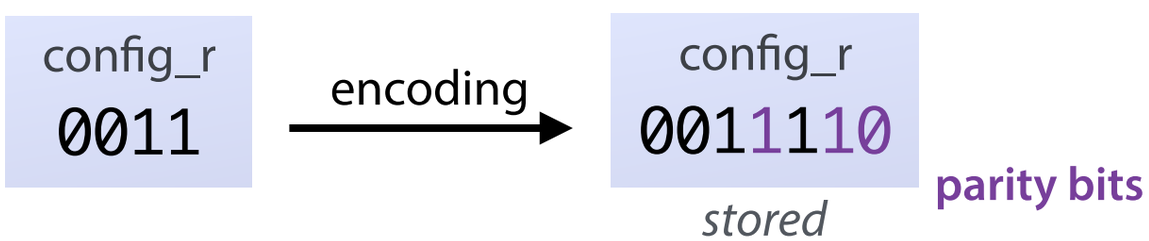

  - Additional parity bits to detect and correct SEU

Mitglied der Helmholtz-Gemeinschaft

Conclusion & Outlook

- Design of digital TDC control simplified
- Area & power consumption reduced to meet P̄ANDA req.
- Radiation protection close to finalization

- Combine analog and digital designs
- Submit design (this year)
- Test first PASTA version

Mitglied der Helmholtz-Gemeinschaft

Conclusion & Outlook

- Design of digital TDC control simplified
- Area & power consumption reduced to meet P̄ANDA req.
- Radiation protection close to finalization

- Combine analog and digital designs
- Submit design (this year)
- Test first PASTA version

People Involved

PASTA: A. Goerres[1], G. Mazza[2], V. Di Pietro[2,3], A. Riccardi[2,3], J. Ritman[1], A. Rivetti[2], T. Stockmanns[1]

TOFPET: A. Di Francesco[4], C. Gastón[4], F. Gonçalves[4], G. Mazza[2], A. Rivetti[2],M. D. Rolo[2,4], J. C. da Silva[4], R. Silva[4], J. Varela[4], V. Veckalns[4], R. Wheadon[4]

[1]: FZ Jülich [2]: INFN Torino [3]: JLU Gießen [4]: LIP Lisbon

Mitglied der Helmholtz-Gemeinschaft

Conclusion & Outlook

- Design of digital TDC control simplified
- Area & power consumption reduced to meet P̄ANDA req.
- Radiation protection close to finalization

- Combine analog and digital designs
- Submit design (this year)
- Test first PASTA version

Thank you!

a.goerres@fz-juelich.de

People Involved

PASTA: A. Goerres[1], G. Mazza[2], V. Di Pietro[2,3], A. Riccardi[2,3], J. Ritman[1], A. Rivetti[2], T. Stockmanns[1]

TOFPET: A. Di Francesco[4], C. Gastón[4], F. Gonçalves[4], G. Mazza[2], A. Rivetti[2],M. D. Rolo[2,4], J. C. da Silva[4], R. Silva[4], J. Varela[4], V. Veckalns[4], R. Wheadon[4]

[1]: FZ Jülich [2]: INFN Torino [3]: JLU Gießen [4]: LIP Lisbon

Mitglied der Helmholtz-Gemeinschaft

Resources

- [**2**, FAIR] GSI Helmholtzzentrum für Schwerionenforschung (2013)
- [**2**, PANDA] A. Cebulla, FZ Jülich (2014)
- [**3**, MVD] R. Schmitz, FZ Jülich (20134)
- [**4**, TOFPET] Stuhrmann, DESY (2013)
- [**6**, TOFPET] Stuhrmann, DESY (2013)

Everything else: **A. Goerres**, FZ Jülich

Mitglied der Helmholtz-Gemeinschaft

BACKUP

Mitglied der Helmholtz-Gemeinschaft

Time Interpolation

- Interpolate clock interval:

1) Trigger signal from discriminator
   Start discharging I_1

2) Synchronized trigger signal
   Stop discharging
   Store coarse time

3) Conversion logic ready
   Start recharging I_2
   Store start of conversion

4) Voltage back to reference value
   Stop recharging
   Store end of conversion

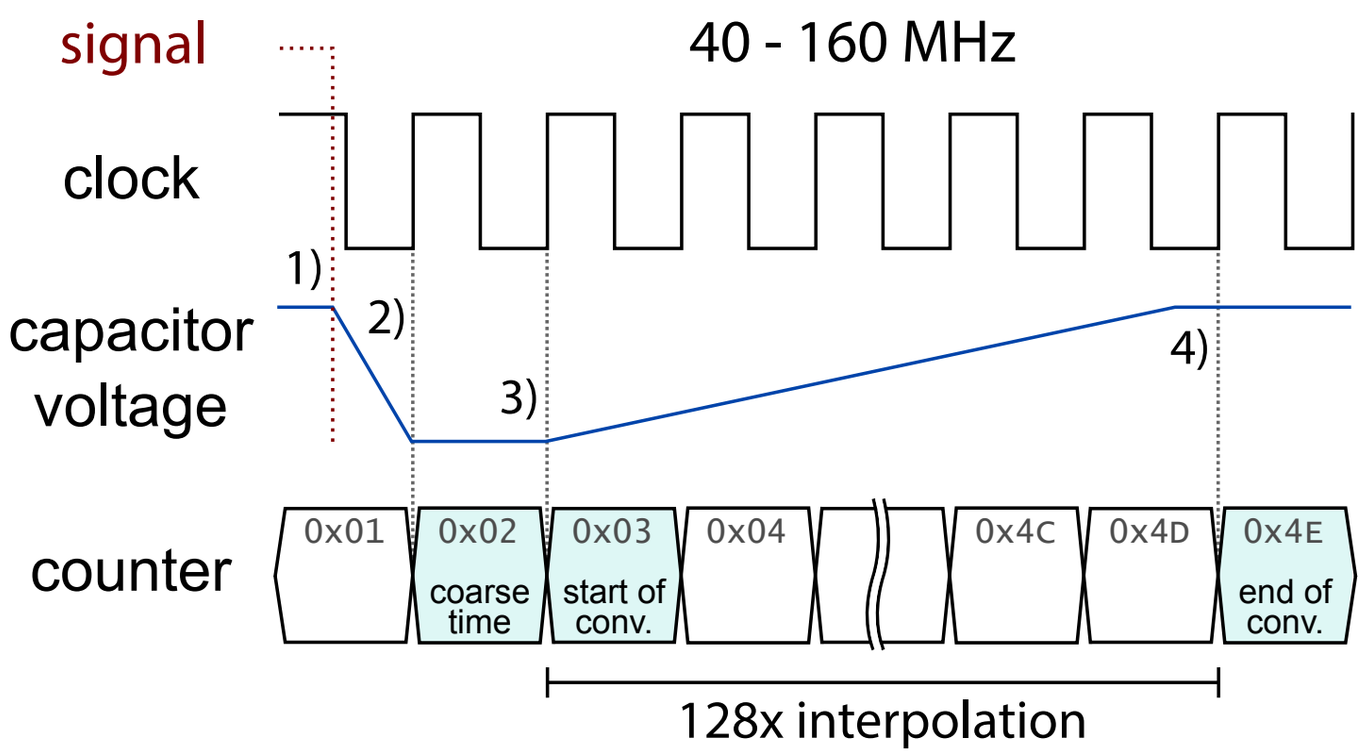

- Yields to 128x interpolation (I_1/I_2)

  ⇒ 50 ps digital resolution at 160 MHz

Mitglied der Helmholtz-Gemeinschaft

Time-to-Digital Converter

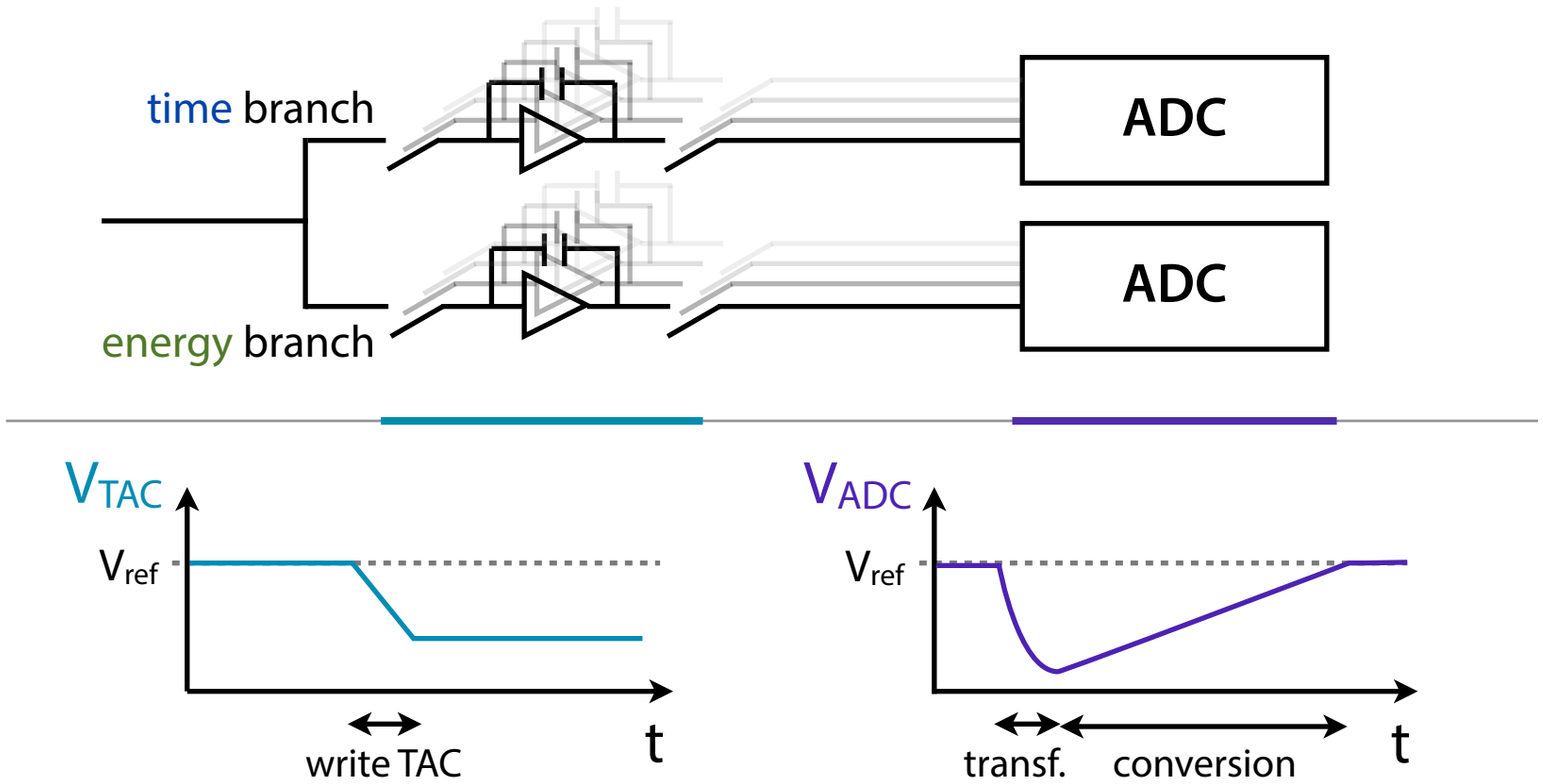

- Two stages: buffer and convert signal
  - Buffering: discharge a capacitor (TAC)
    - **Start**: threshold; **End**: next edge of clock*
  - Transfer to **4x** larger capacitor, linearly recharge with **32x** smaller current (*Wilkinson ADC*)
- Increase time resolution by **128** (50 ps @ 160 MHz)
  - Conversion takes ~ 3 µs → TAC buffer **multiplicity of 4**

ADC: Analog to Digital Converter
TAC: Time to Analog Converter

*: Dynamic range 0-2.5 clock cycles

Mitglied der Helmholtz-Gemeinschaft

WRITE_CTRL – trigger_select

Purpose: get a trigger to start TDC

Generate Different Trigger

- Rising edge of DOT
- Rising edge of DOE
- Falling edge of DOE
- Rising edge of Test Pulse
- Falling edge of Test Pulse

→

Select Trigger

Multiplexer to get:

- TRIG_T (default: re_DOT)
- TRIG_E (default: fe_DOE)

3 bit config. multiplexer

↓

Start charging of TAC

→

Create Synchronous Signal

Take TRIG_x and feed it to synchronization chain

Output: TRIG_xS

↓

Stop charging of TAC

Latch coarse time

Switch TAC if finished (TAC_SELECTOR)

Mitglied der Helmholtz-Gemeinschaft

Change of Technology

- Switch towards area optimized technology (tecB)
  - Supports the reduction of the pitch
  - Structure size: 130 µm, tecA → 110 µm, tecB
  - Less development costs
    - Shared wafer instead of full engineering run

- Typical changes in digital project
  - Area occupation: ↘ 30-50 %
  - Power consumption: ↗ 10-20 %

Mitglied der Helmholtz-Gemeinschaft

Synchronization Chain

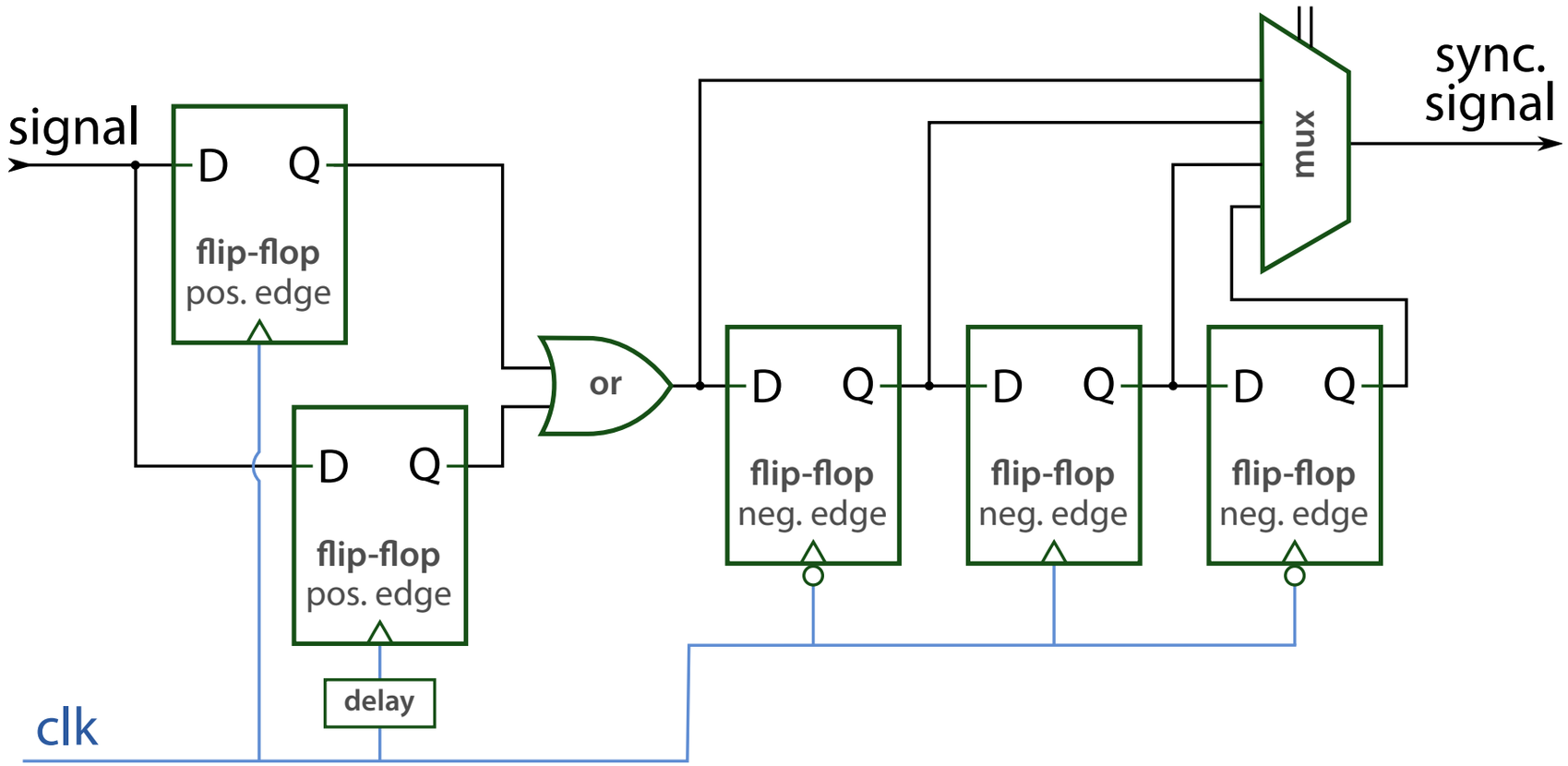

- Asynchronous → synchronous signal
- Chain lowers probability of metastable output
- Two input flip-flops removes timing violation

Mitglied der Helmholtz-Gemeinschaft