JUSTUS-LIEBIG-UNIVERSITÄT GIESSEN

A Low-Power Front-End Amplifier for the Microstrip Sensors of the PANDA Microvertex Detector

Valentino Di Pietro[1]

Kai-Thomas Brinkmann[1], Angelo Rivetti[2], Alberto Riccardi[1], Manuel Rolo[1], Sara Garbolino[1]

1: II. Physikalisches Institut, JLU Gießen
2: INFN Torino

DPG Spring Meeting 2014

Contents

FAIR

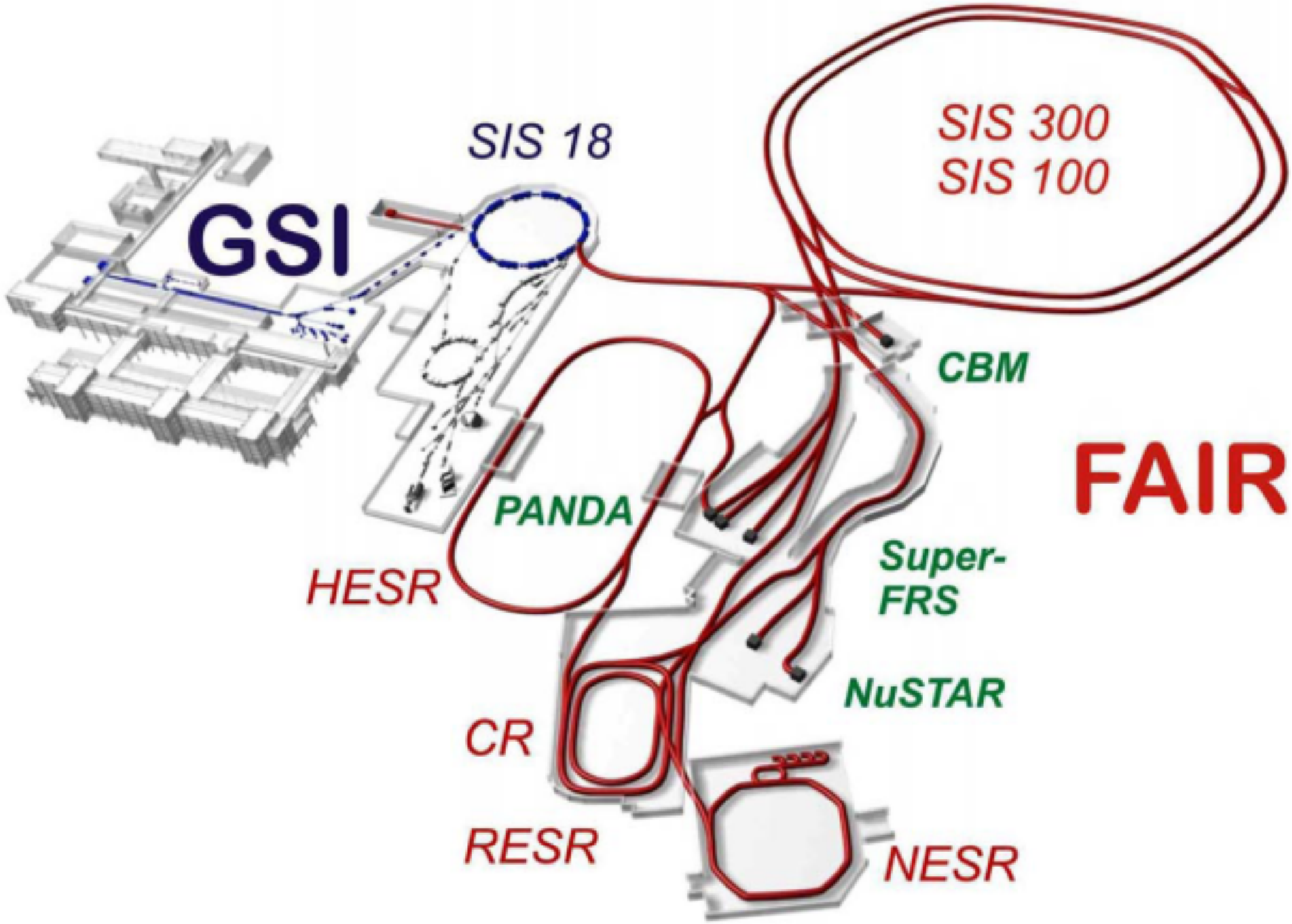
SIS 18
SIS 300
SIS 100
GSI
CBM
FAIR
PANDA
HESR
Super-
FRS
NuSTAR
CR
RESR
NESR

PANDA MVD

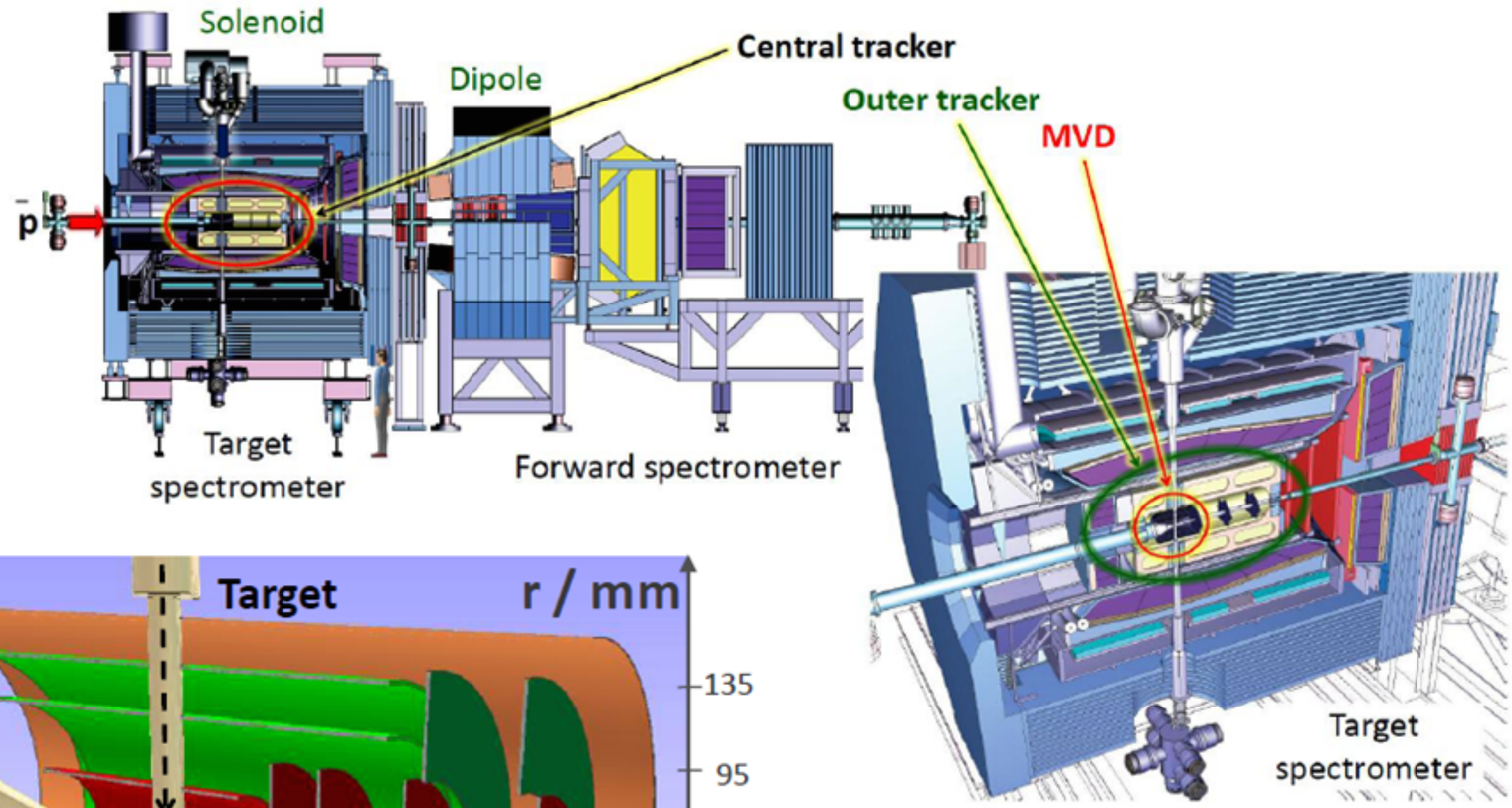

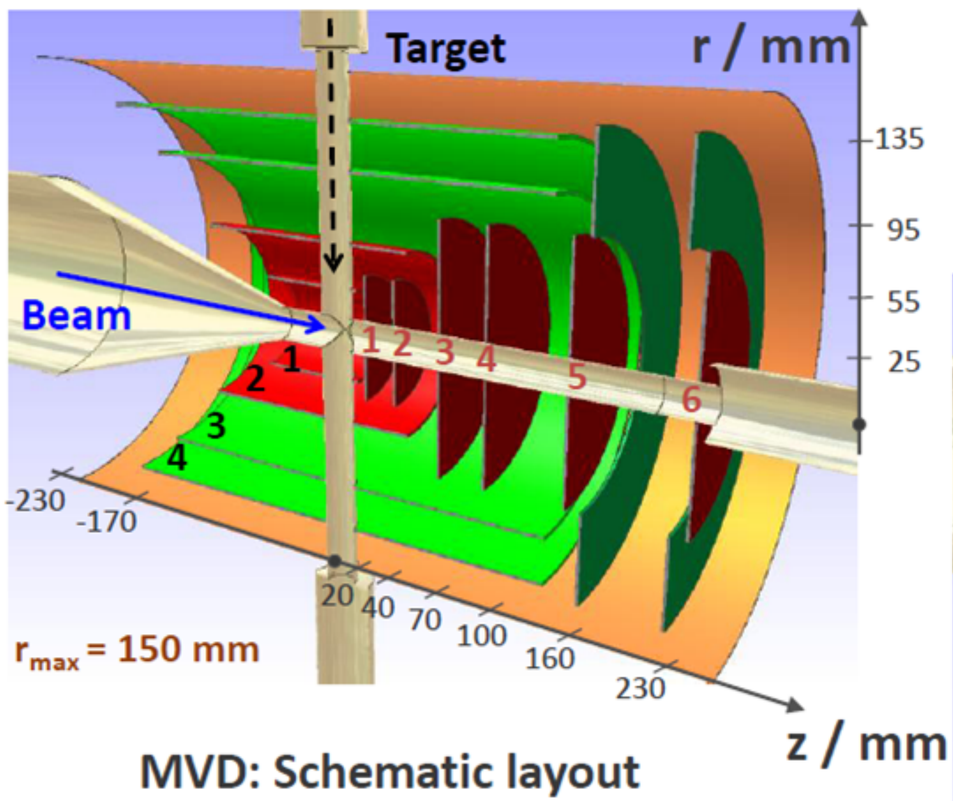

MVD: Schematic layout

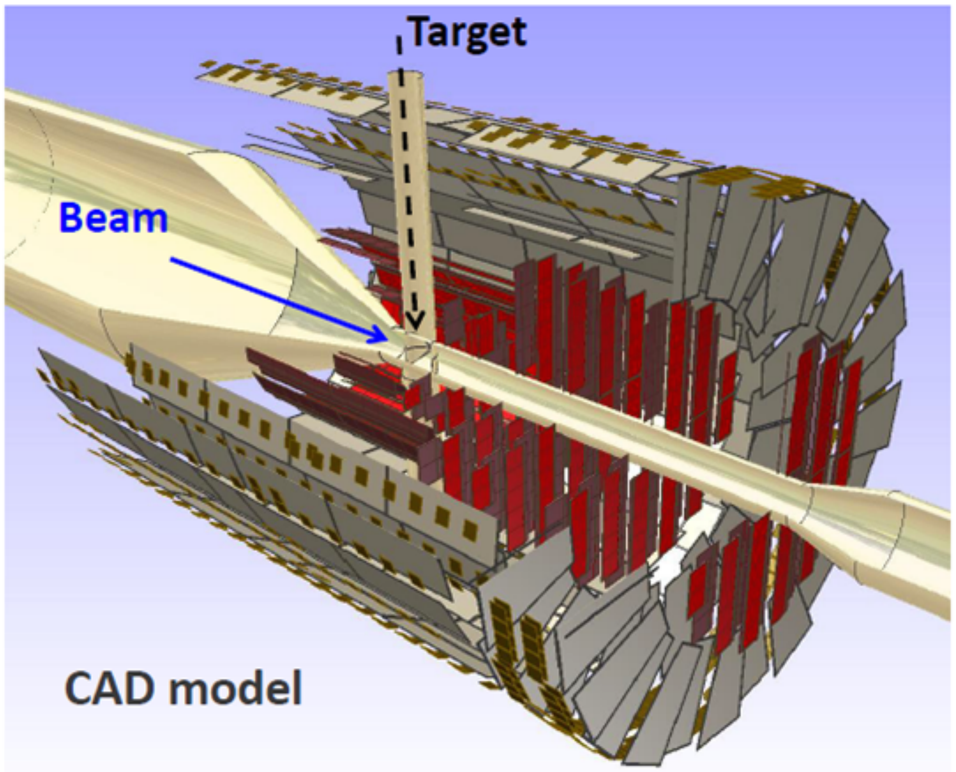

CAD model

Hans-Georg Zaunick HK 34.2

PANDA STrip ASIC

Specifications

- Event rate up to 40kHz
- Detector capacitance (15 - 25)pF
- Input charge (1 - 40)fC

Goals

- Linear time measurement with input charge
- Noise < 1500 e^-
- Power consumption ~ 4mW per channel

Time over Threshold

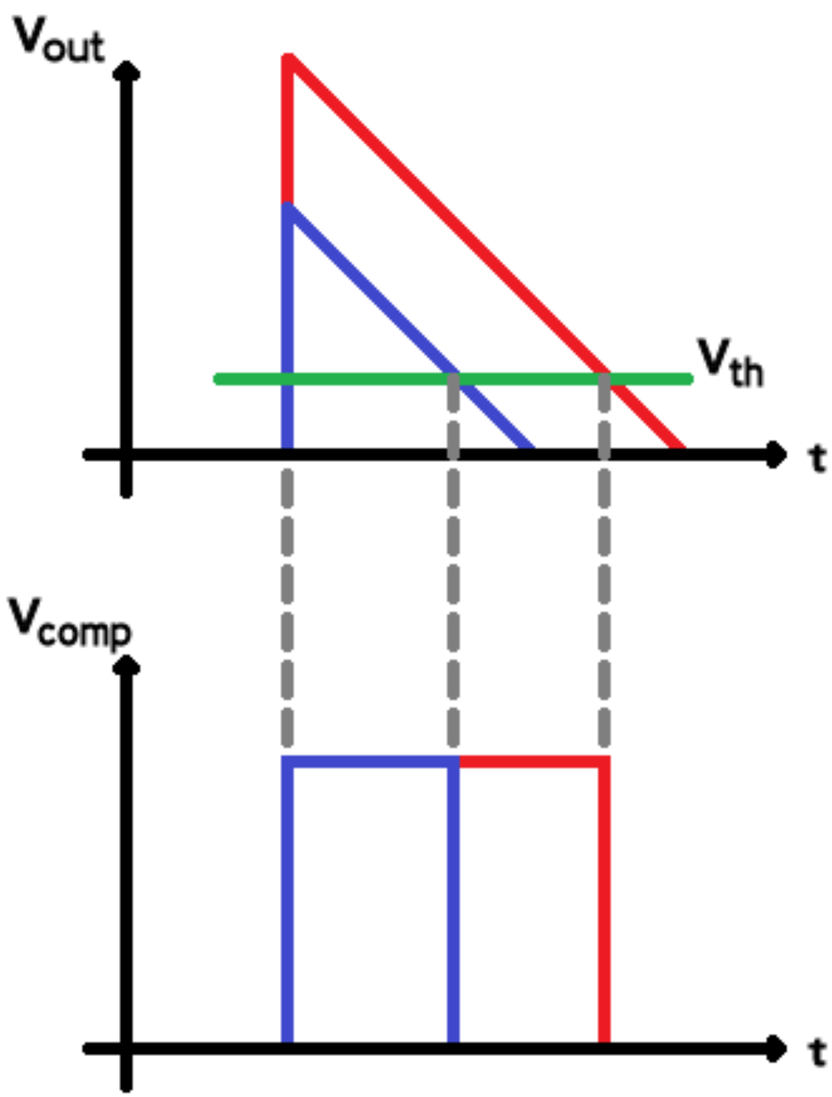

Why?

- Good results obtained by two different architectures:
  - ToPix
    (INFN Torino)
  - TOF-PET
    (LIP Lisboa, INFN Torino)

PASTA Chip

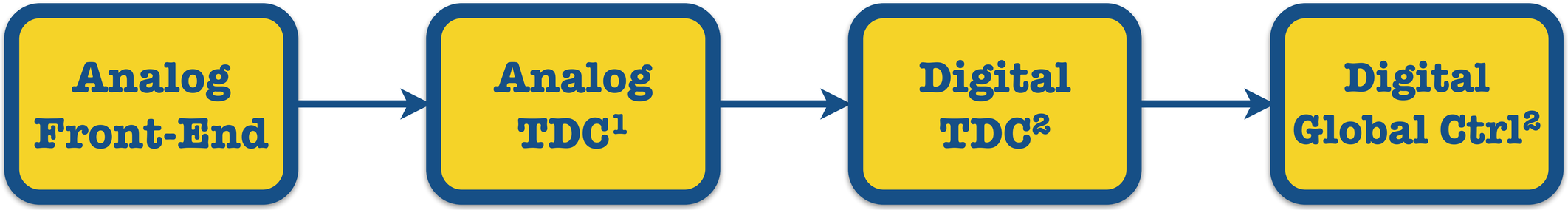

1: Alberto Riccardi HK 6.1
2: André Goerres HK 21.3

PASTA Chip

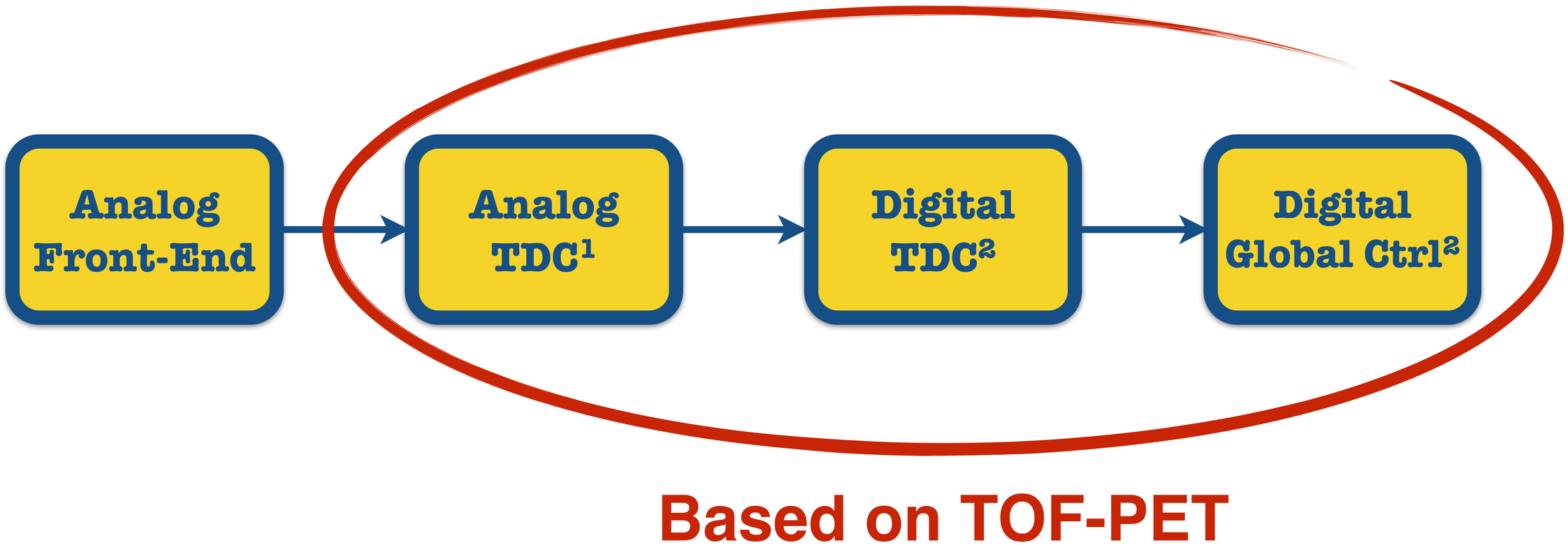

1: Alberto Riccardi HK 6.1
2: André Goerres HK 21.3

PASTA Chip

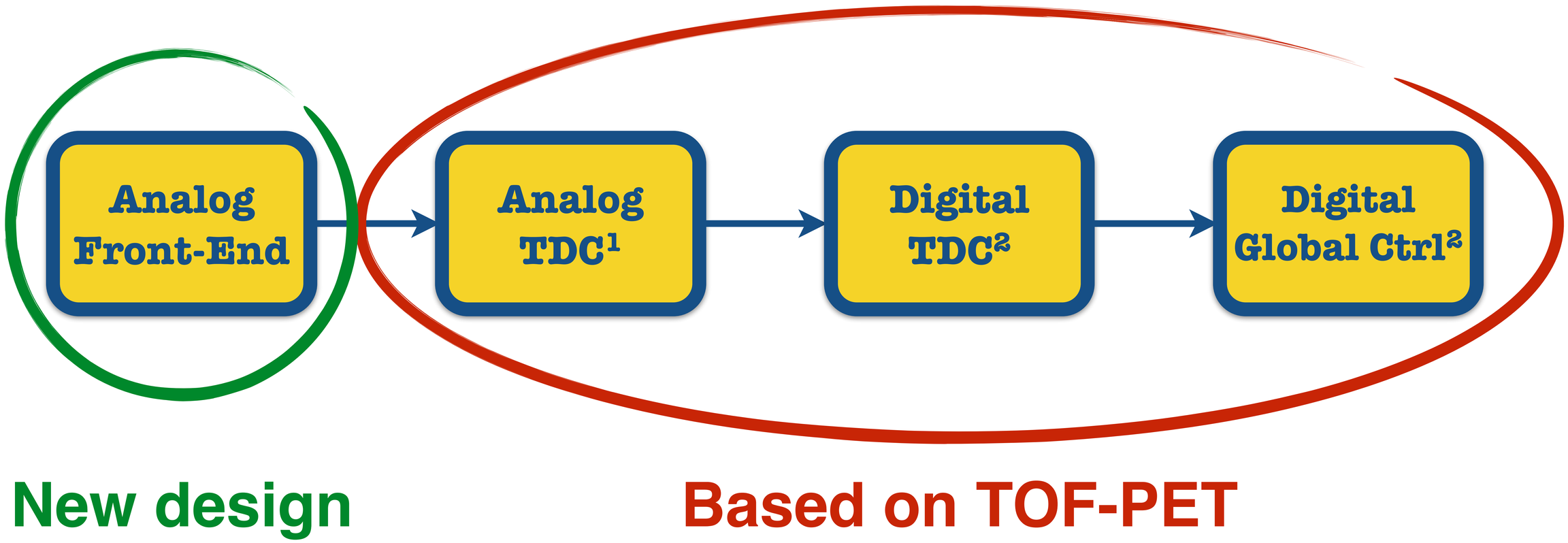

1: Alberto Riccardi HK 6.1
2: André Goerres HK 21.3

TOF-PET

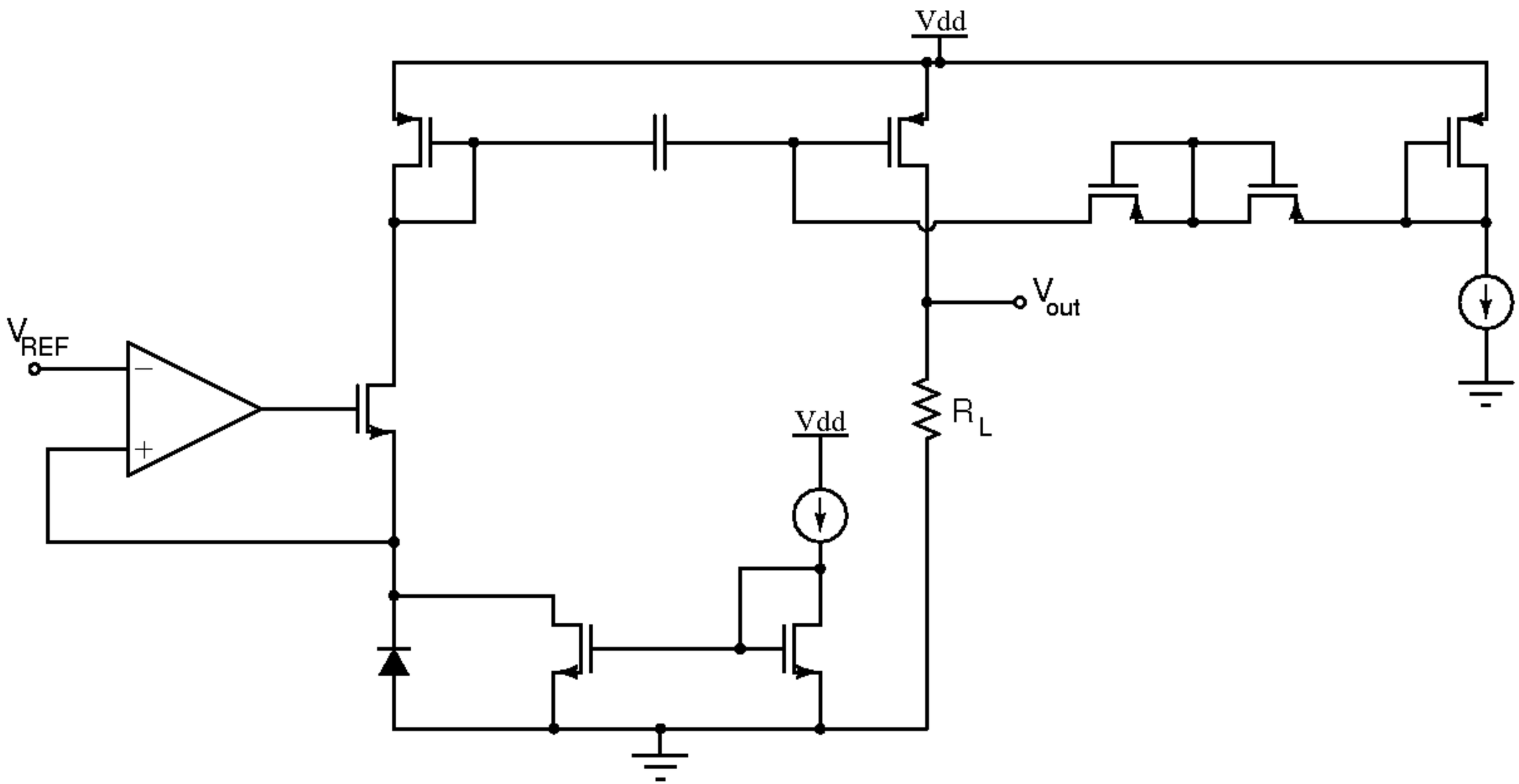

TOF-PET

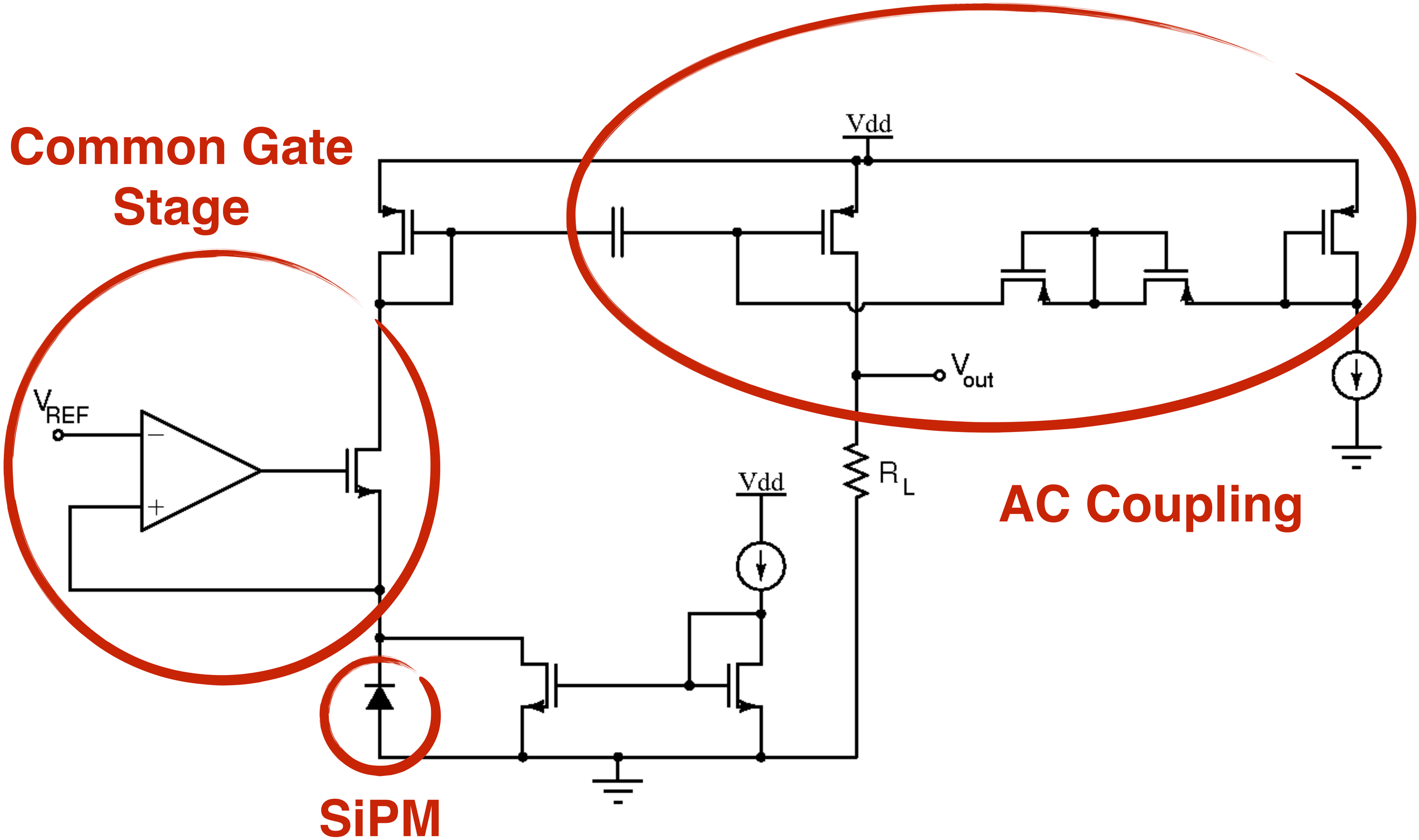

TOF-PET vs PASTA

Linearity

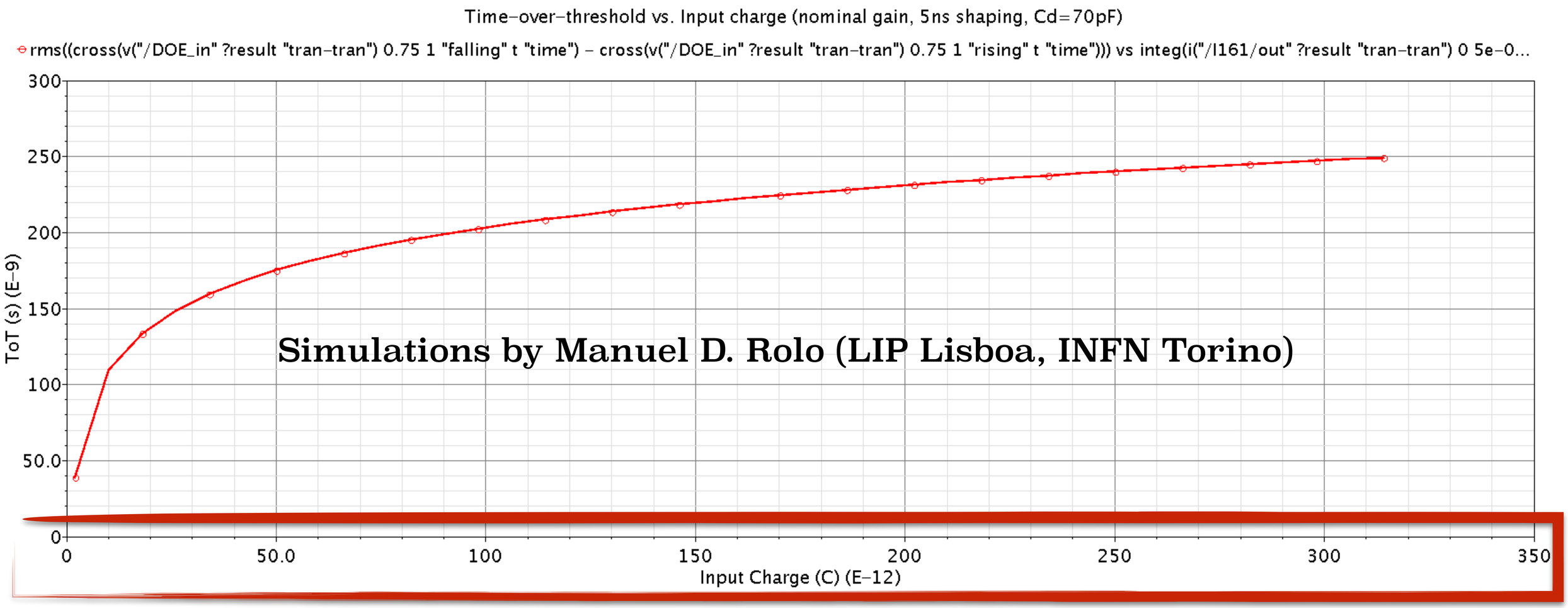

Specifications

- Detector capacitance up to 350pF (x14 C_{det} PASTA)

PASTA Analog FE

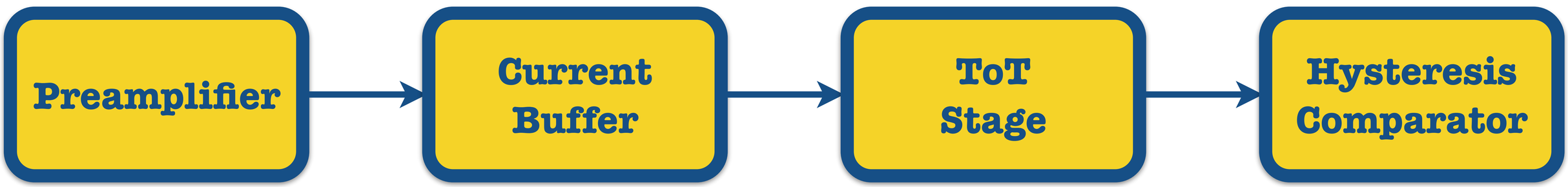

PASTA Analog FE

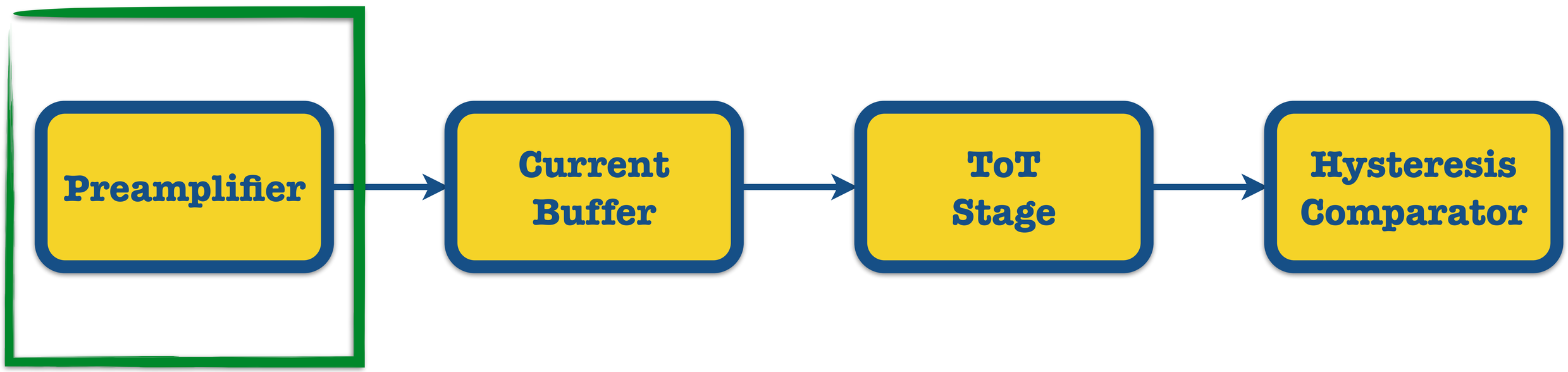

Capable to process signals of both negative and positive polarity

PASTA Analog FE

Current gain and
impedance adjustment

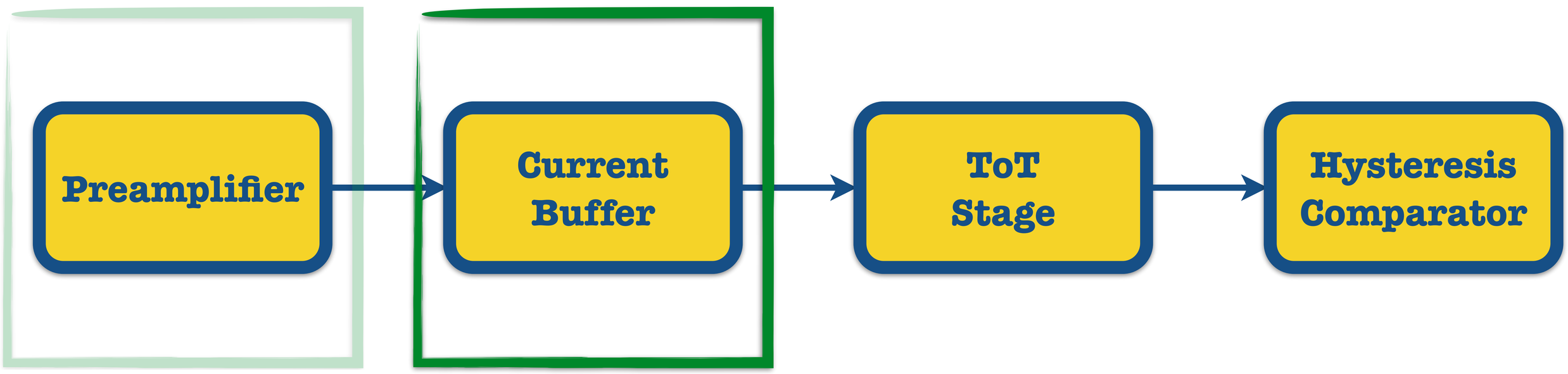

Capable to process
signals of both
negative and positive
polarity

PASTA Analog FE

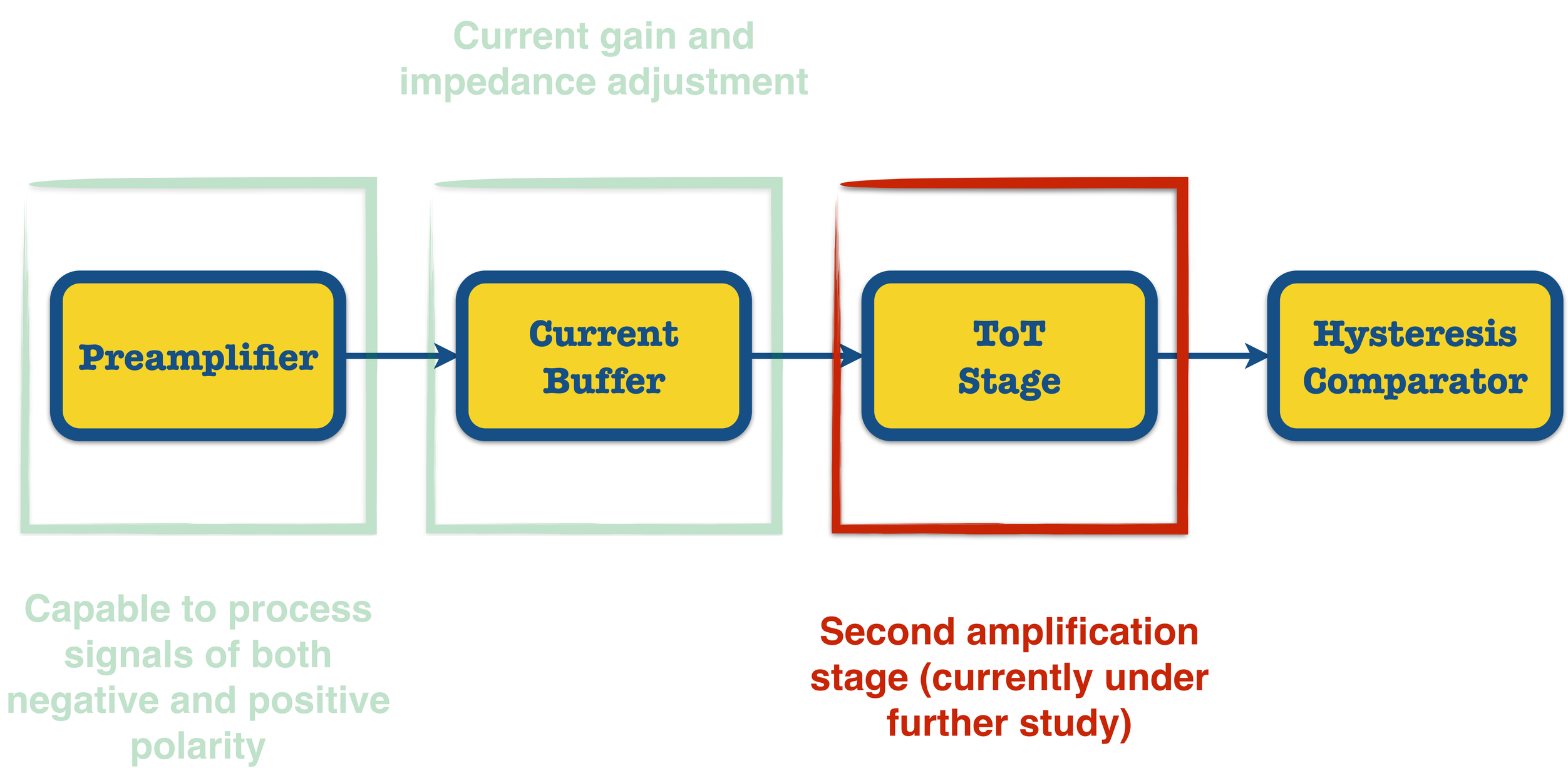

PASTA Analog FE

Current gain and impedance adjustment

Layout design complete

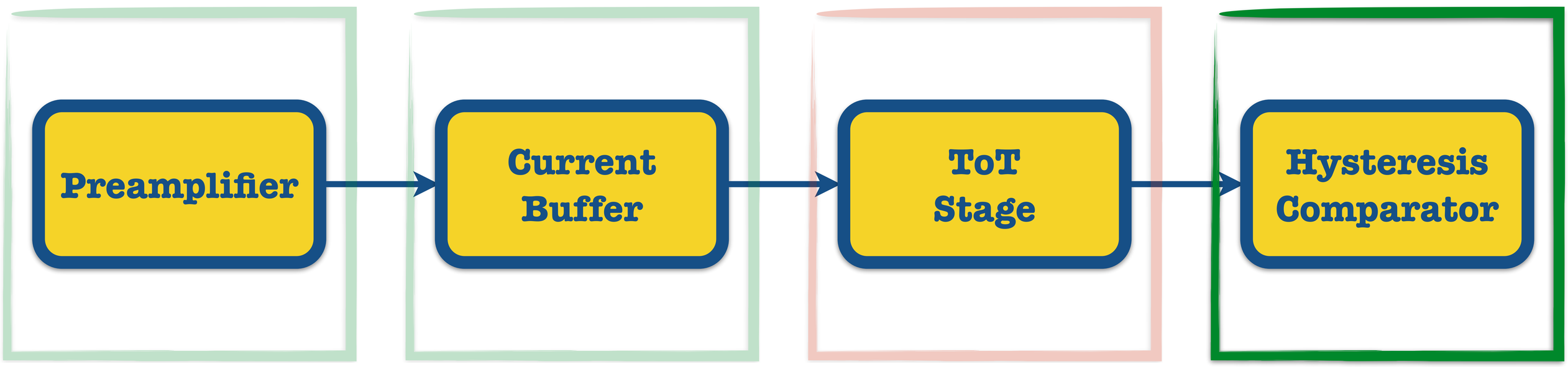

Capable to process signals of both negative and positive polarity

Second amplification stage (currently under further study)

Preamplifier

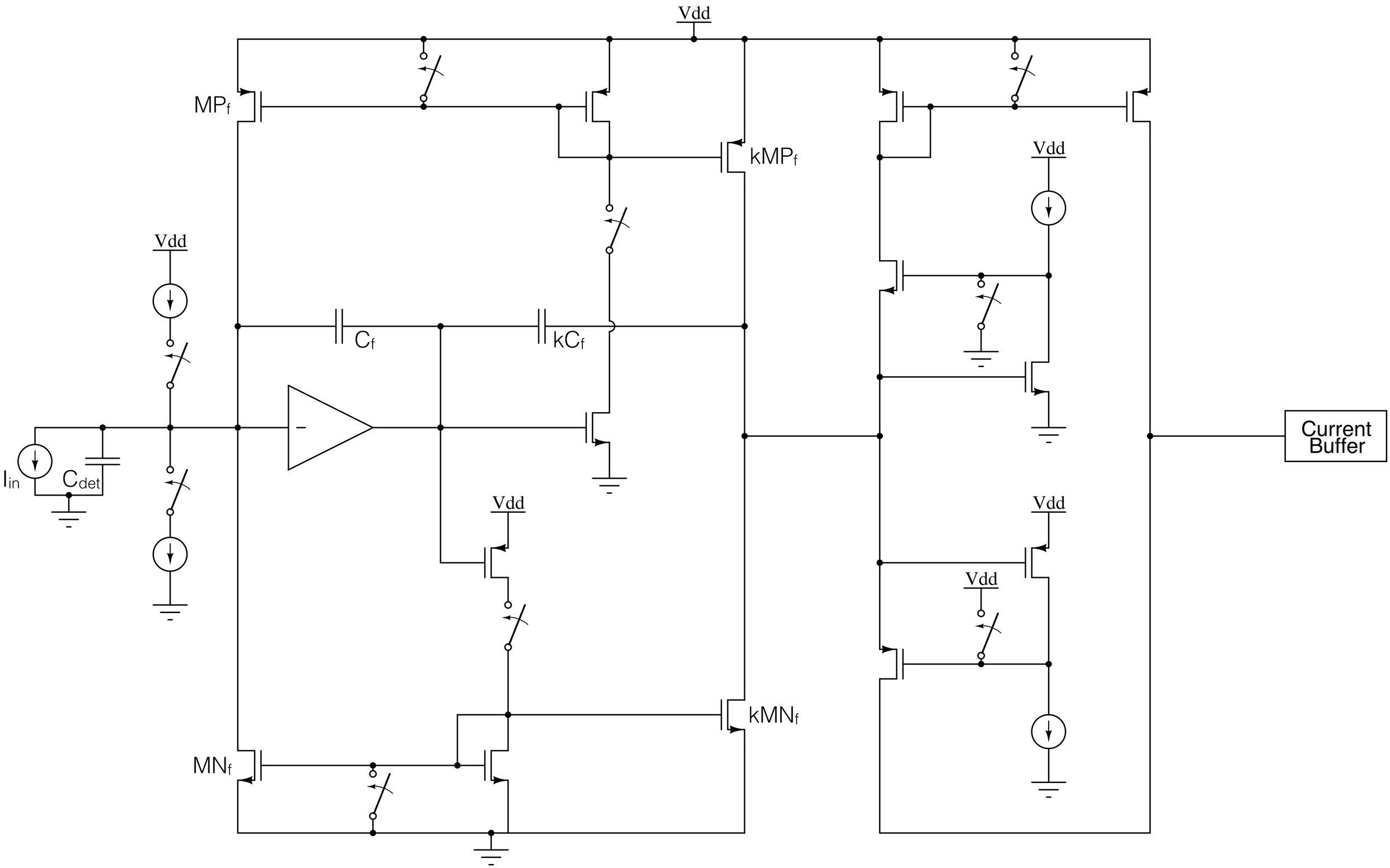

Preamplifier

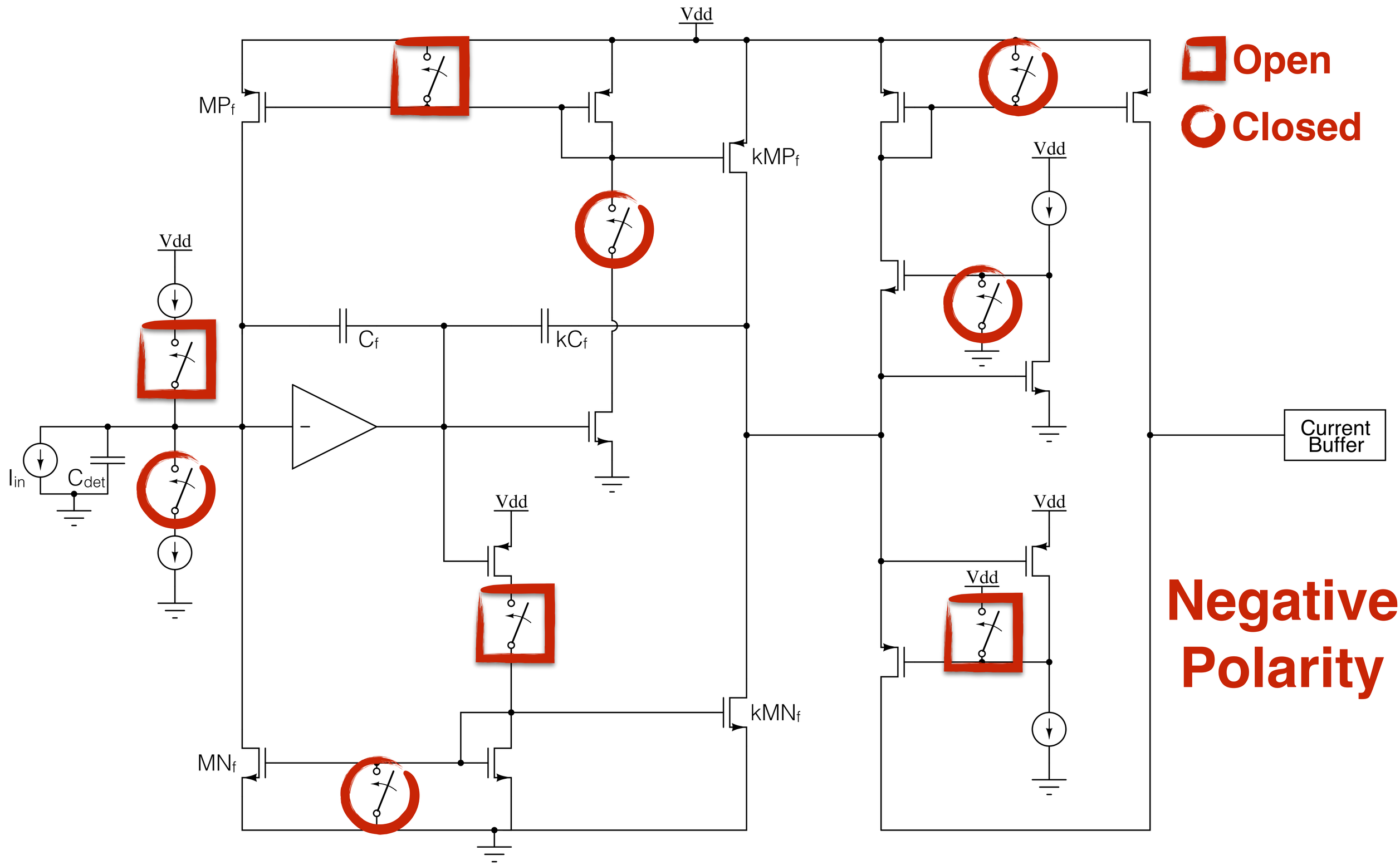

Preamplifier

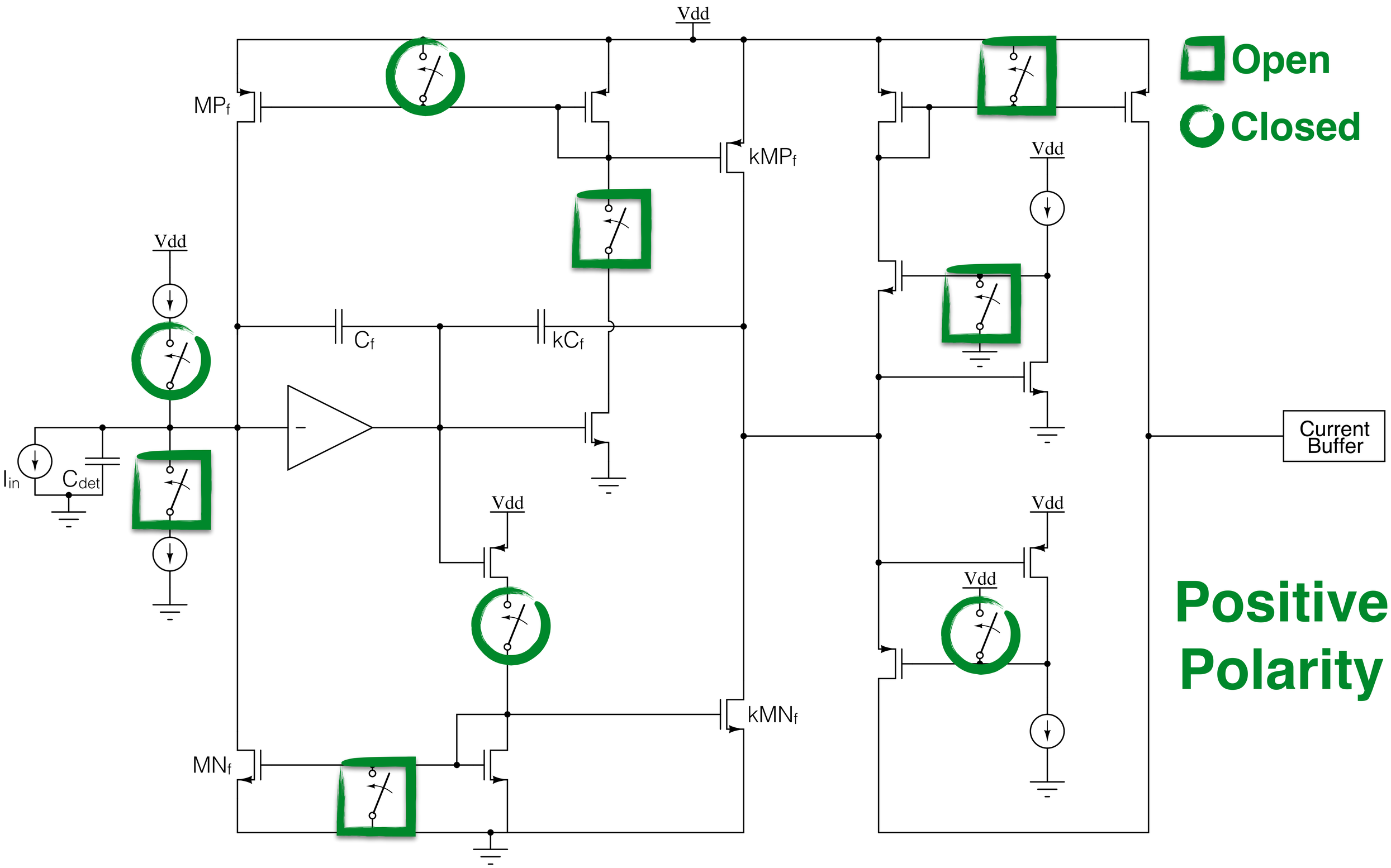

Current Buffer

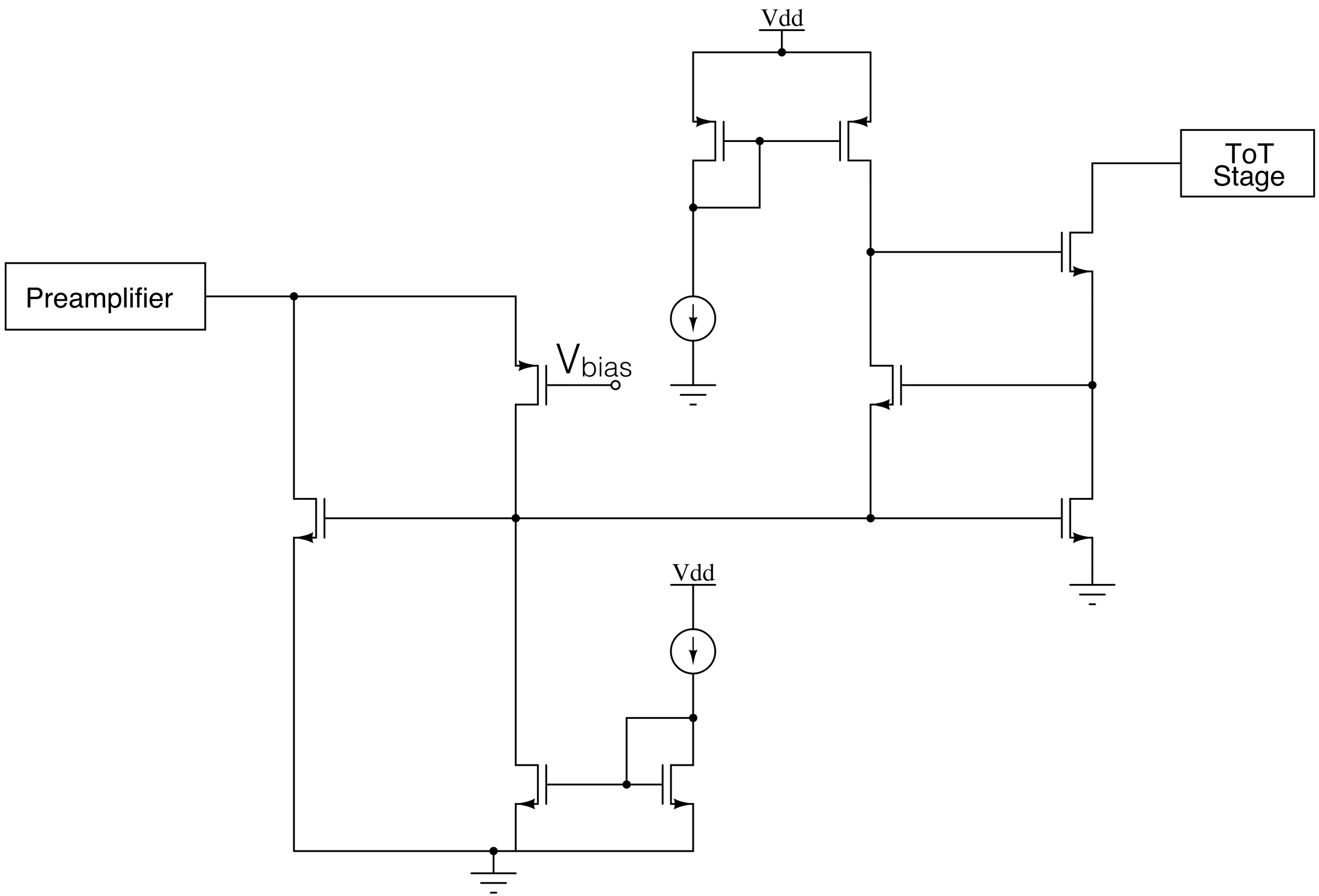

ToT Stage

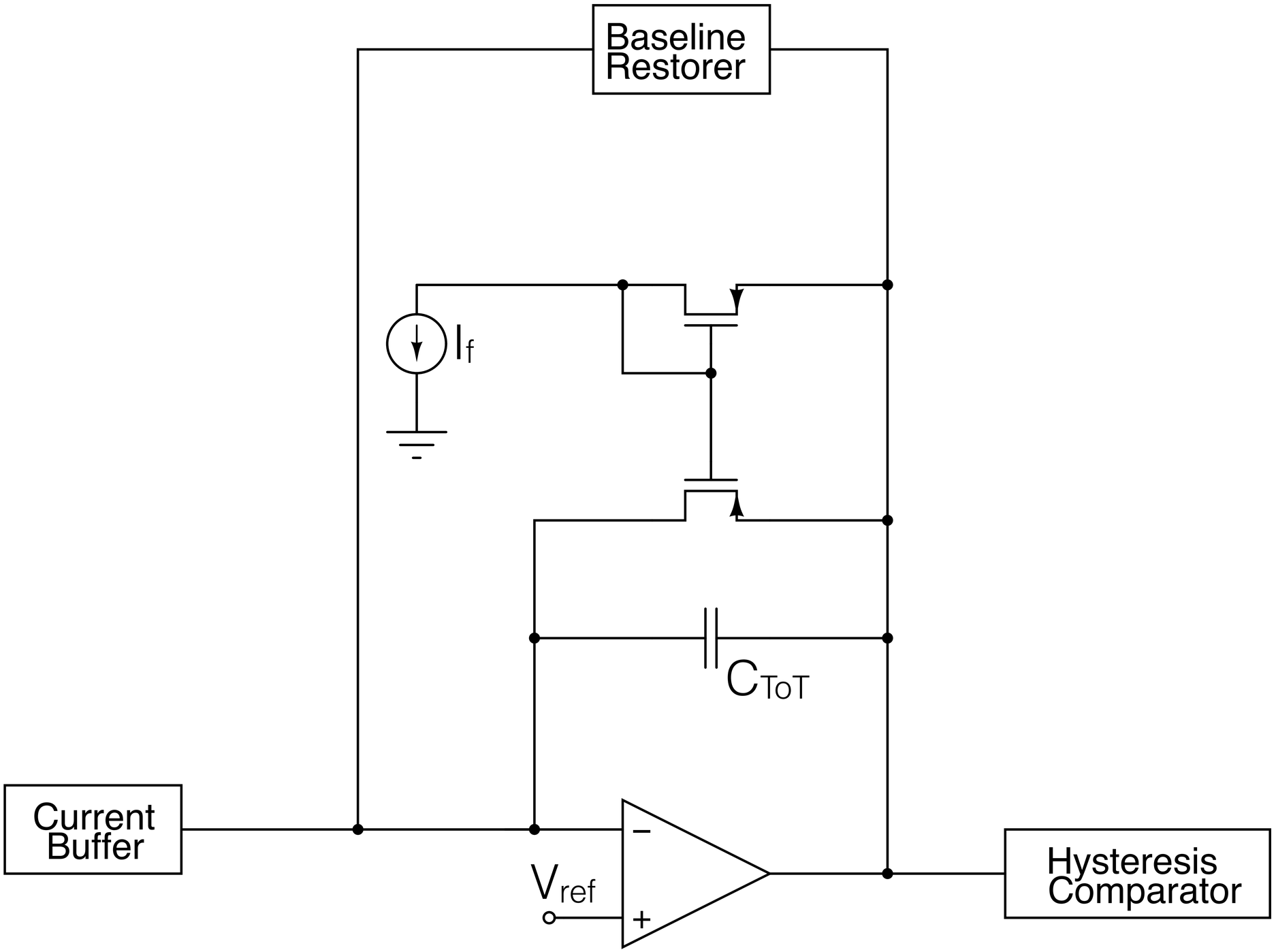
Baseline Restorer
I_f
C_{ToT}
Current Buffer
V_{ref}
−
+
Hysteresis Comparator

NPol: Linearity

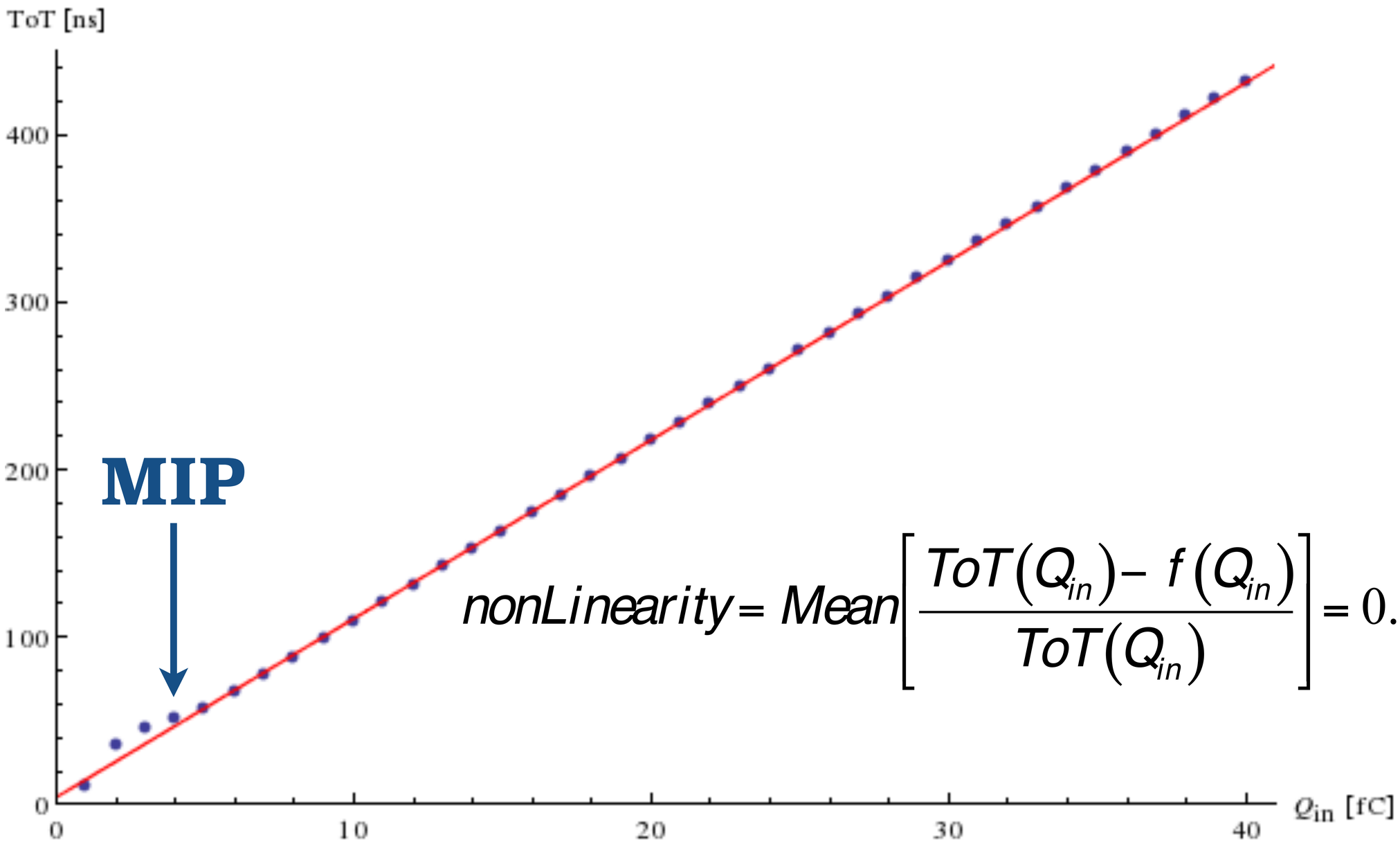

$$nonLinearity = Mean\left[\frac{ToT(Q_{in}) - f(Q_{in})}{ToT(Q_{in})}\right] = 0.21\%$$

PPol: Linearity

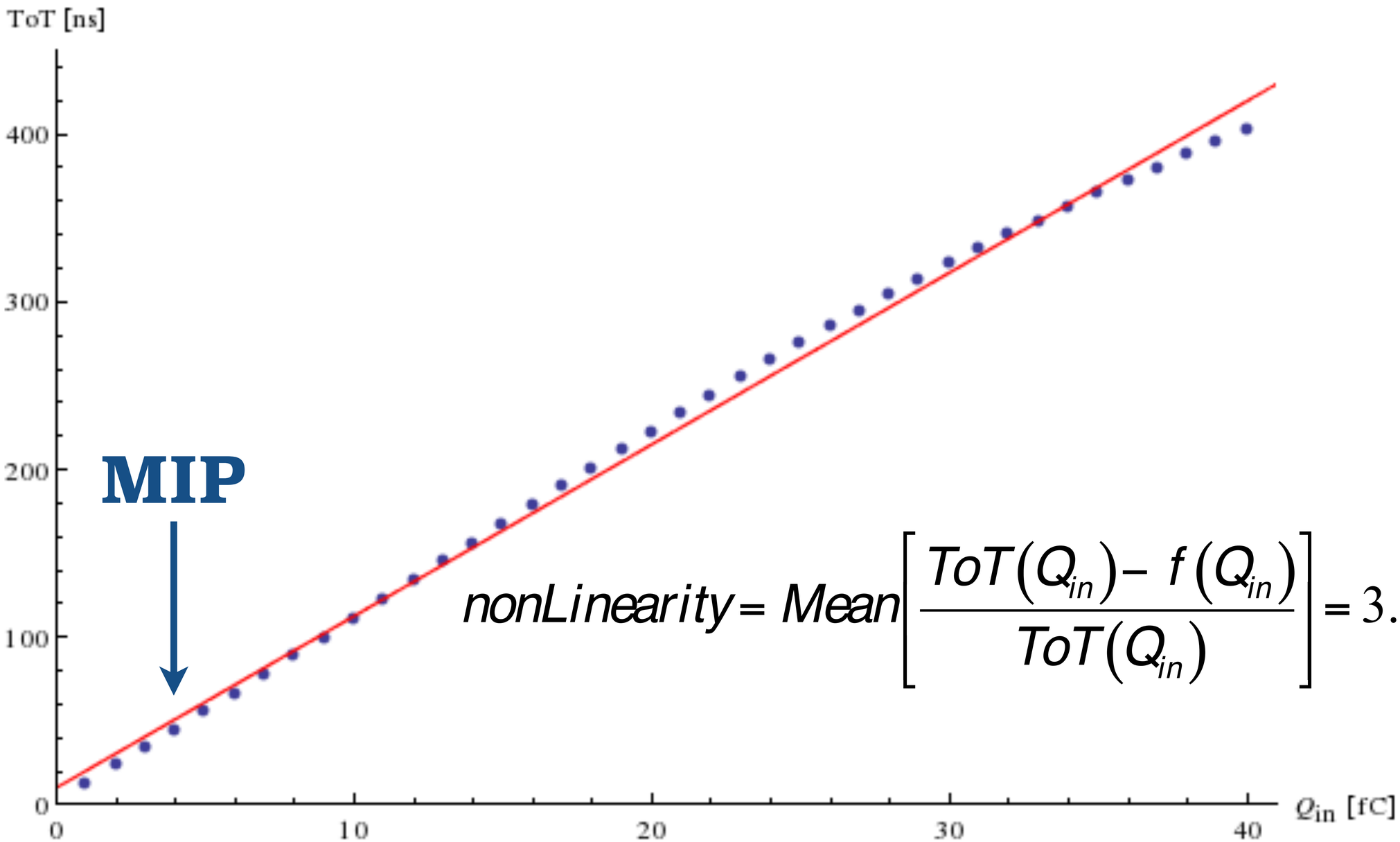

$$nonLinearity = Mean\left[\frac{ToT(Q_{in}) - f(Q_{in})}{ToT(Q_{in})}\right] = 3.27\%$$

NPol: ENC

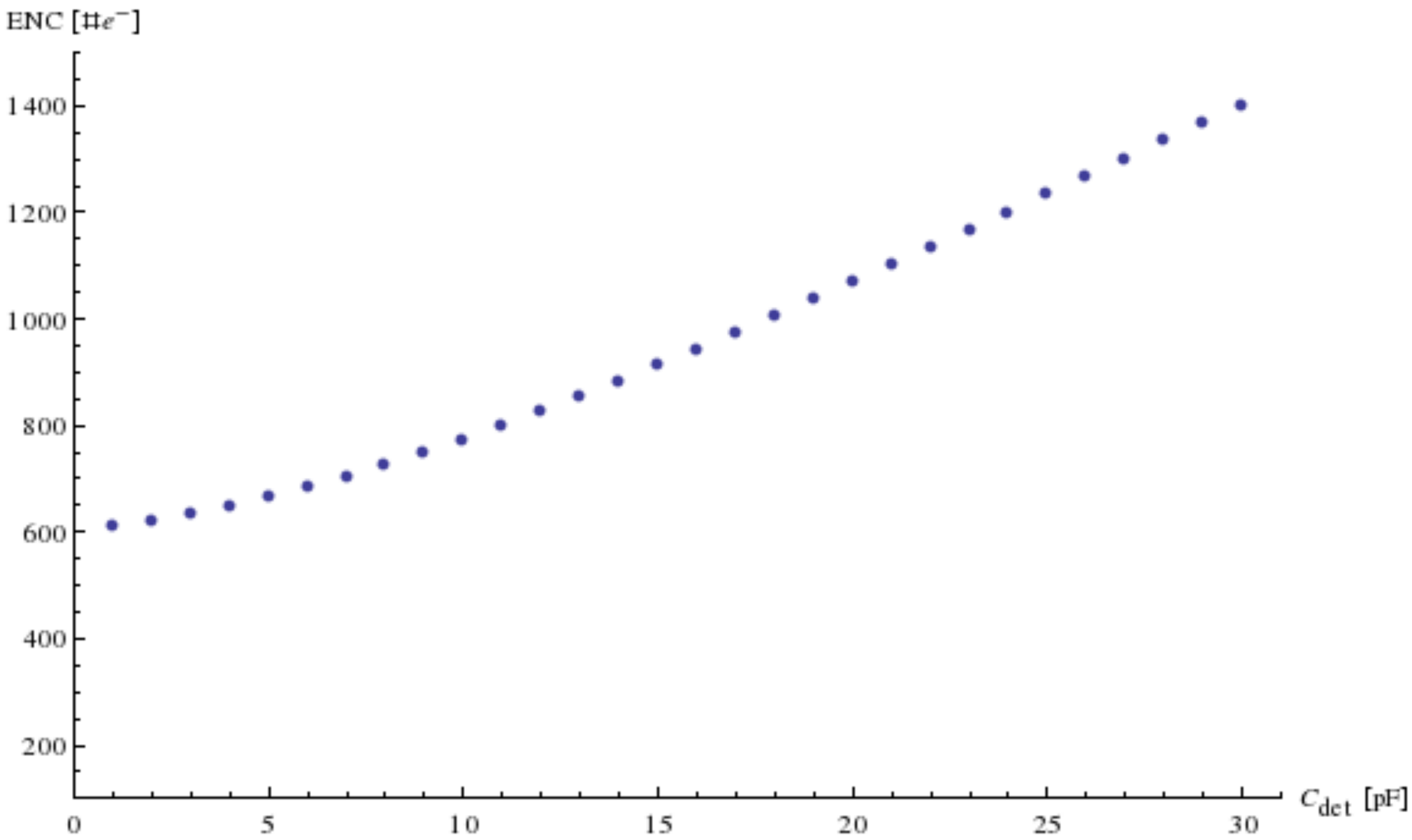

NPol: ENC

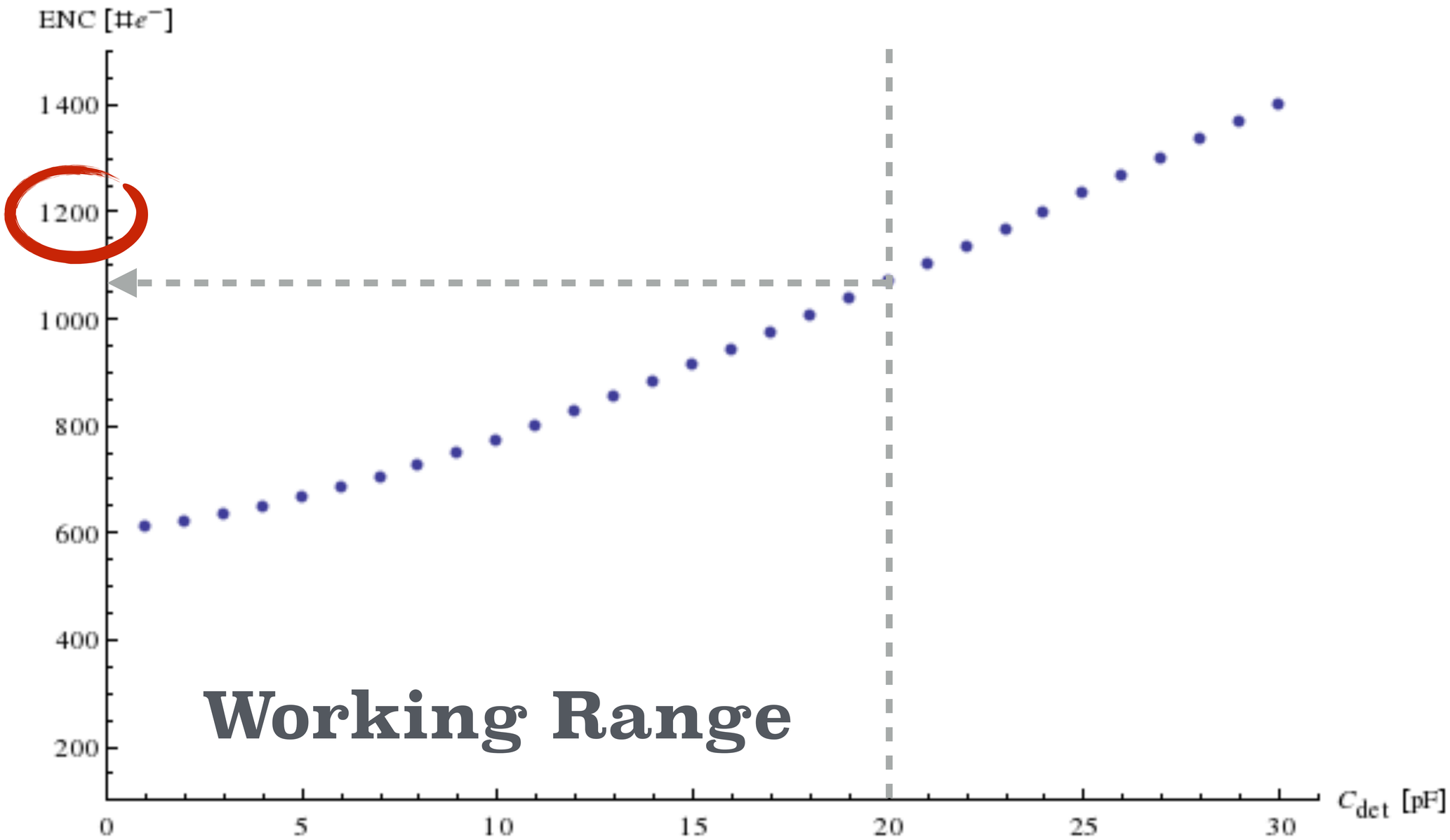
ENC [#e⁻]
1400
1200
1000
800
600
400
200
0
5
10
15
20
25
30
C_{det} [pF]
Working Range

PPol: ENC

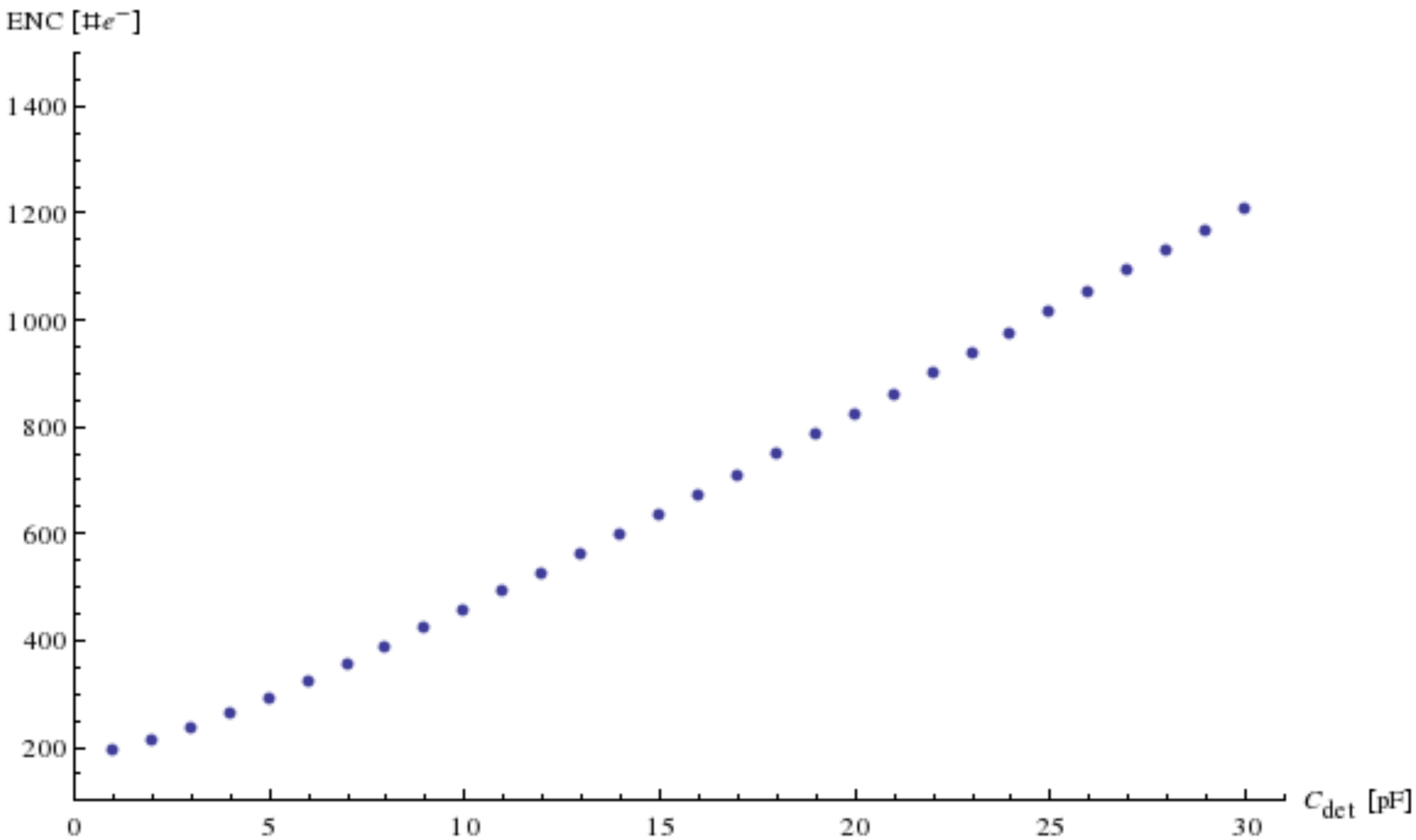

PPol: ENC

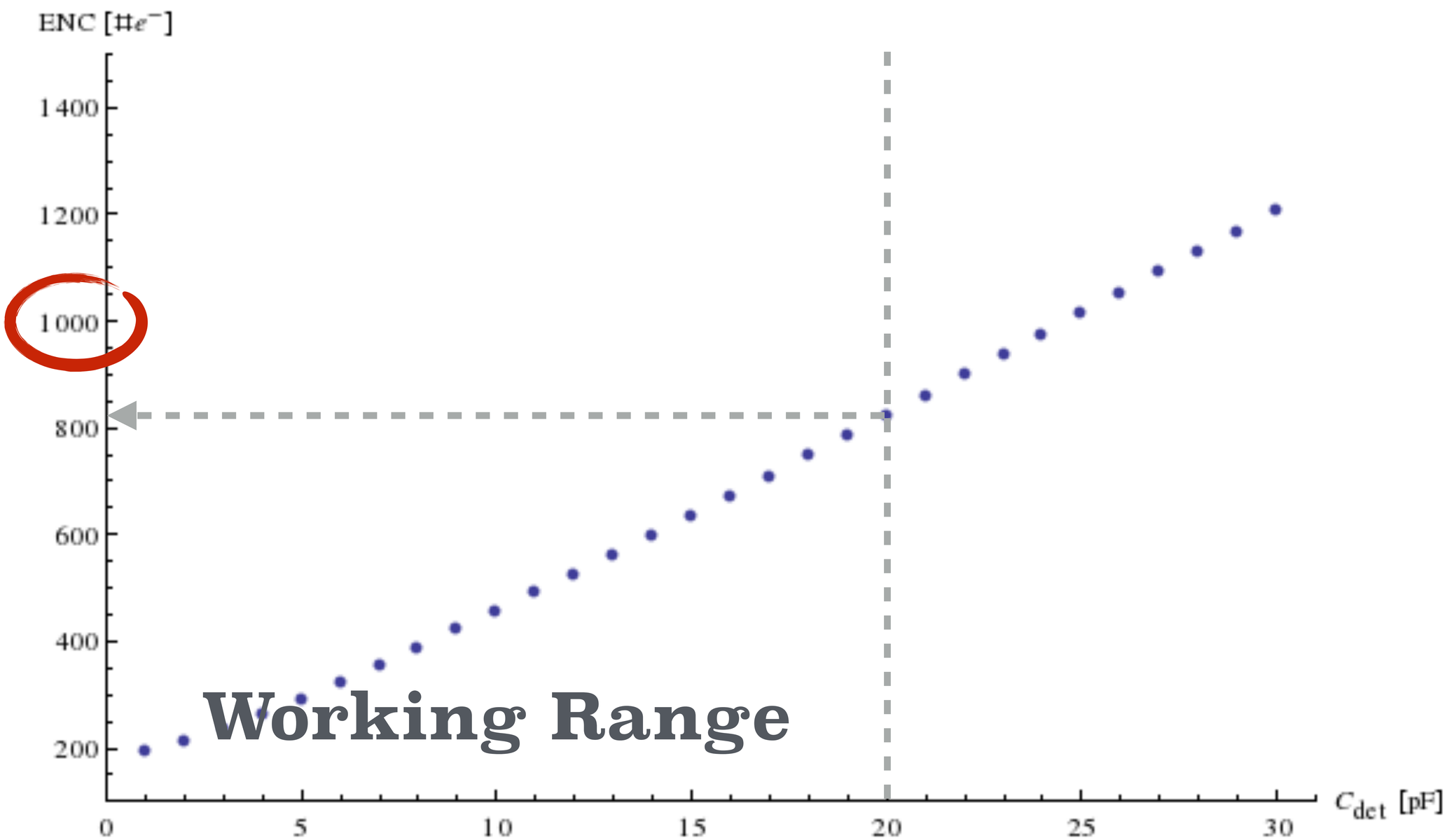
ENC [#e⁻]
1400
1200
1000
800
600
400
200
0
5
10
15
20
25
30
C_{det} [pF]
Working Range

Perspectives

- Improve the linearity of the ToT vs Qin
- Layout all the stages
- Submit the project to the foundry

Perspectives

- Improve the linearity of the ToT vs Qin
- Layout all the stages
- Submit the project to the foundry

Thank You

Valentino.DiPietro@exp2.physik.uni-giessen.de

Acknowledgements

GEFÖRDERT VOM

Bundesministerium
für Bildung
und Forschung

FAIR

HGS-HIRe for FAIR
Helmholtz Graduate School for Hadron and Ion Research

HIC for FAIR
Helmholtz International Center

JUSTUS-LIEBIG-
UNIVERSITÄT
GIESSEN

p̄anda

Backup Slides

Dynamic ToT Stage

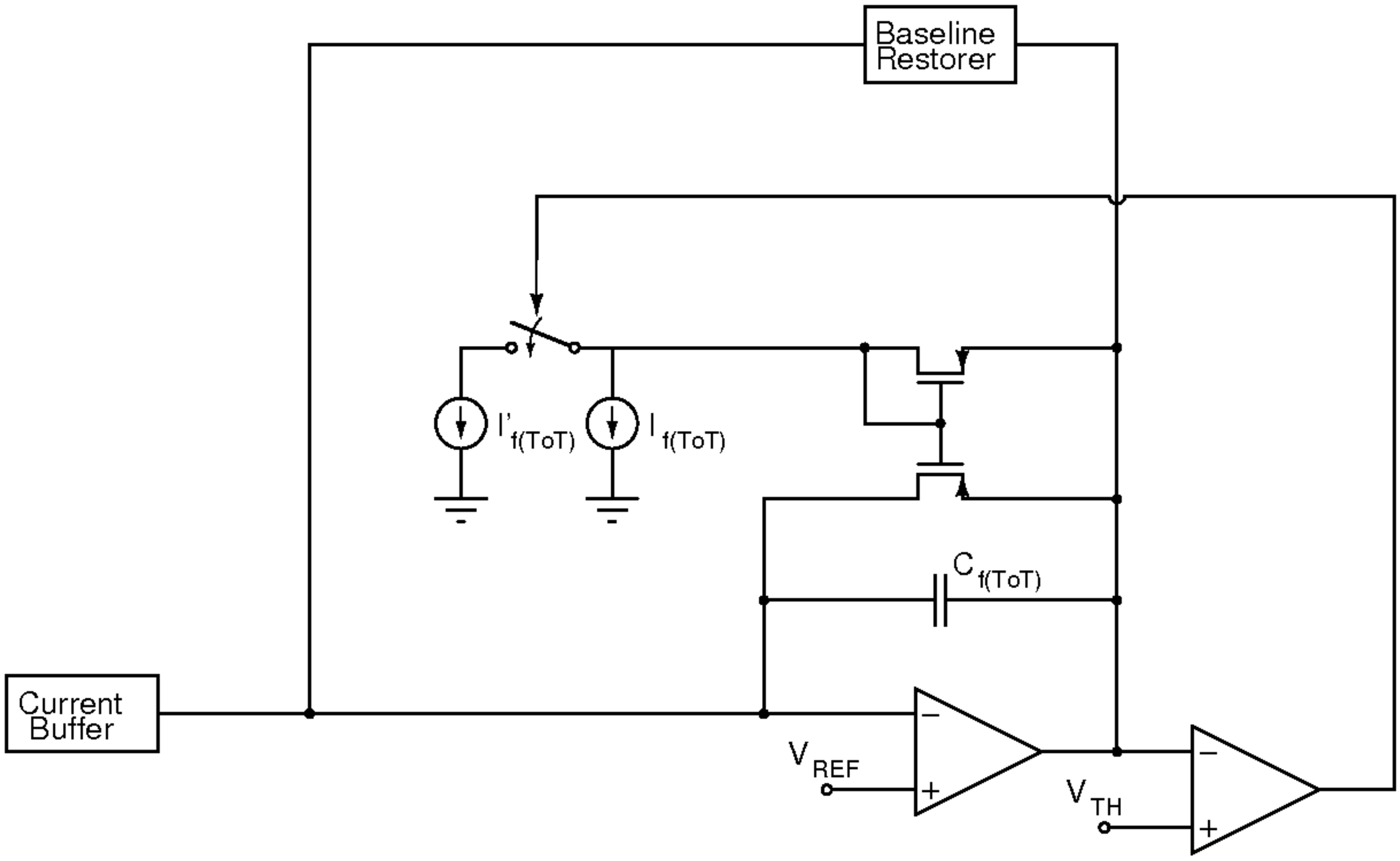

NPol: Linearity

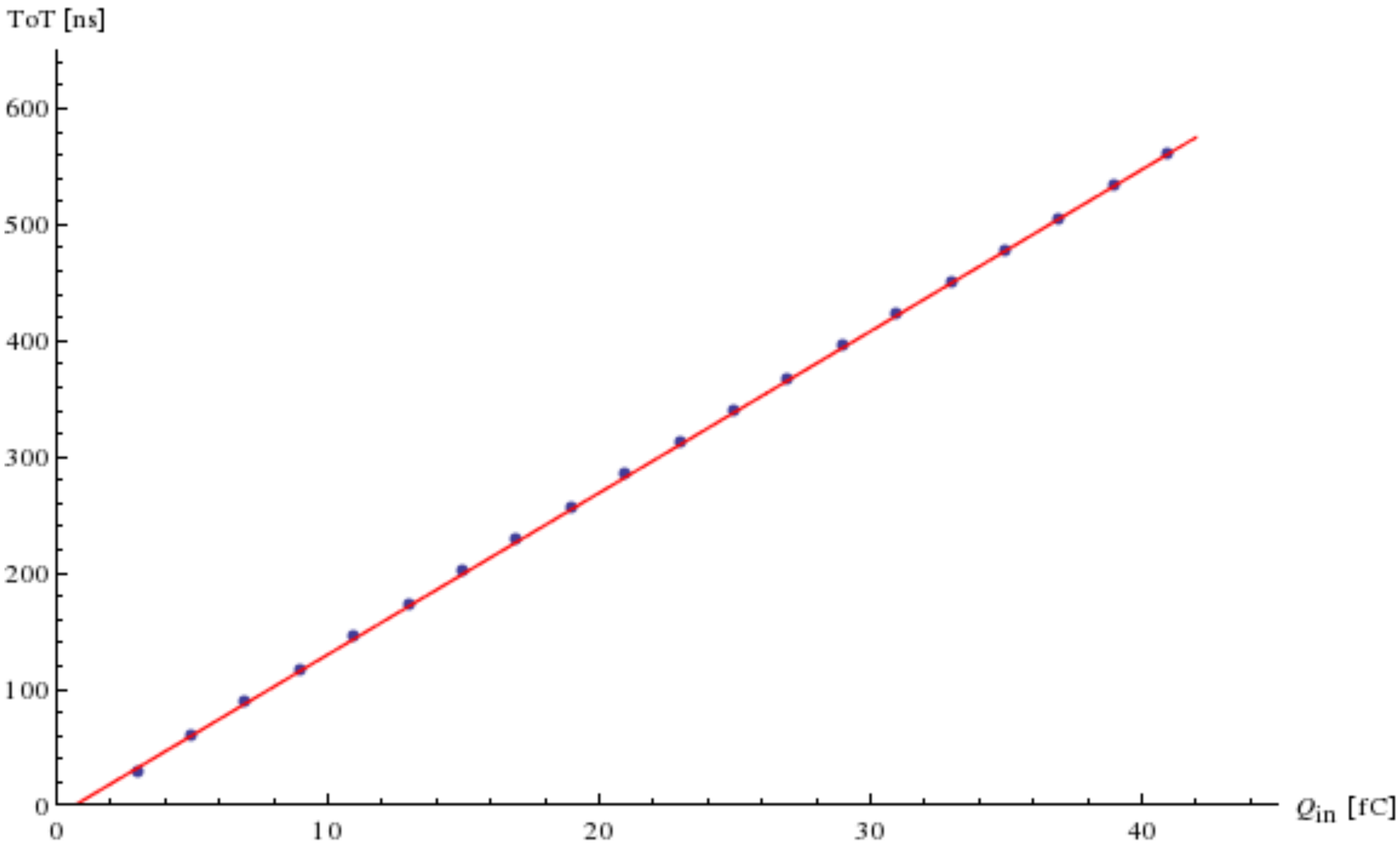

PPol: Linearity