DPG Frühjahrstagung
Hadronen und Kerne
Bonn, March 16, 2010

Thomas Würschig

The Micro-Vertex-Detector (MVD) of the $\bar{P}$ANDA experiment *

* supported by BMBF and EU FP6 DIRAC Secondary Beams

Outline

- Introduction
- Detector development
  - Implementation
  - Hardware development
  - Mechanics aspects
- Simulation
- Summary

Introduction

- $\bar{P}$ANDA at FAIR facility

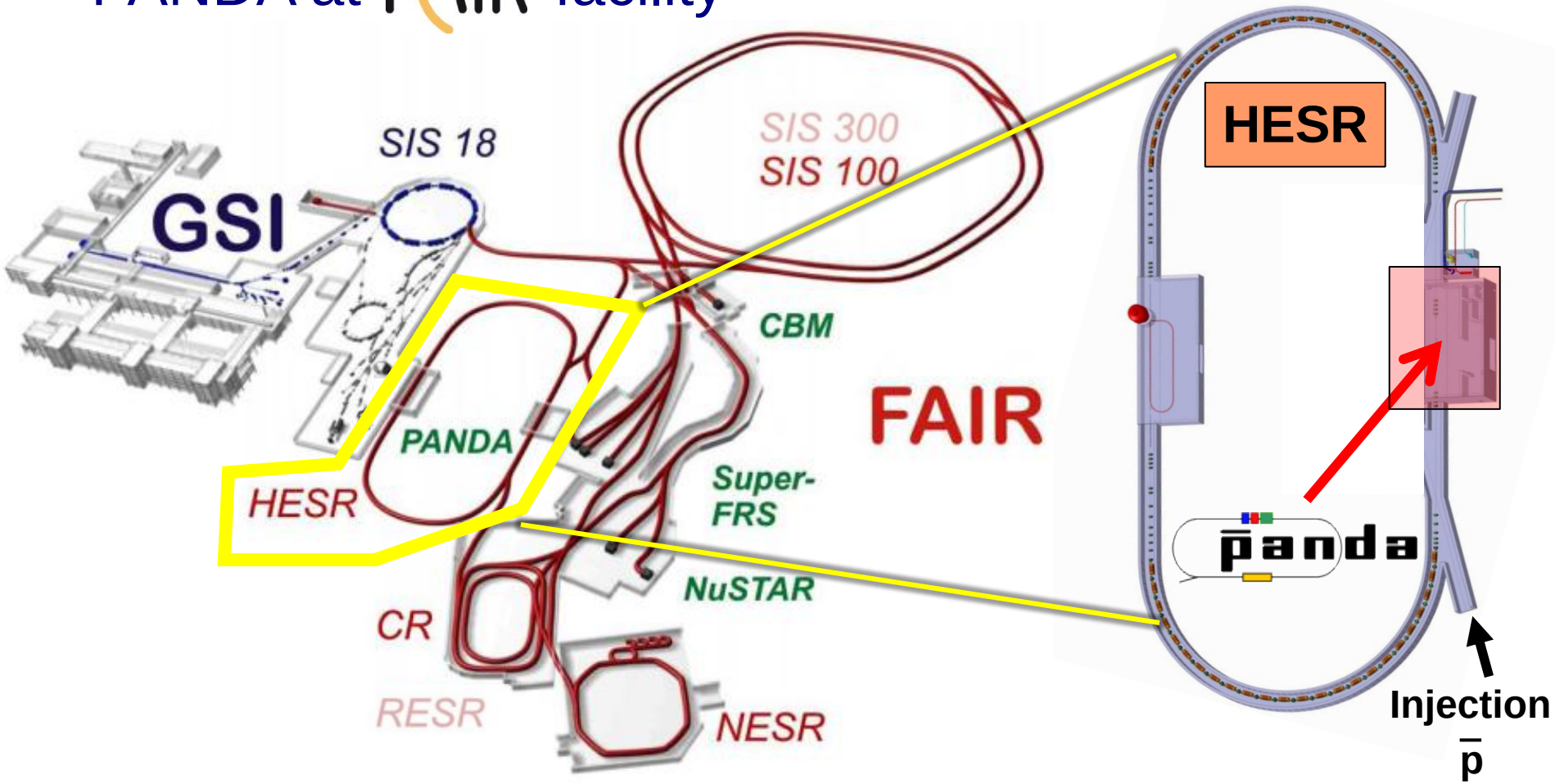

Introduction

- **H**igh **E**nergy **S**torage **R**ing
  - High luminosity antiproton bea
  - Stochastic / electron cooling
- **P̄ANDA** experiment
  - Anti**P**roton **An**nihilations at **Da**rmstadt

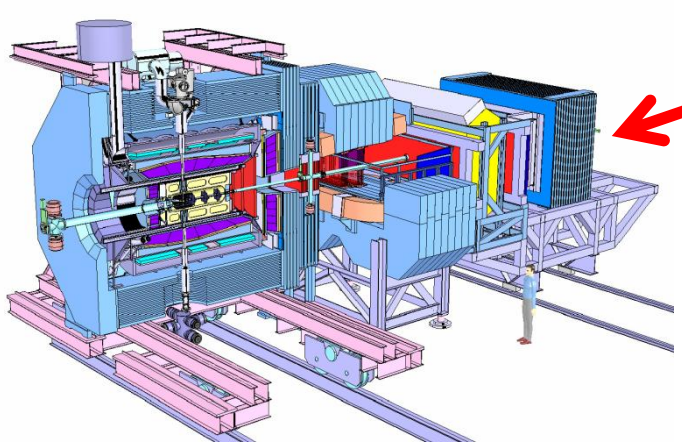

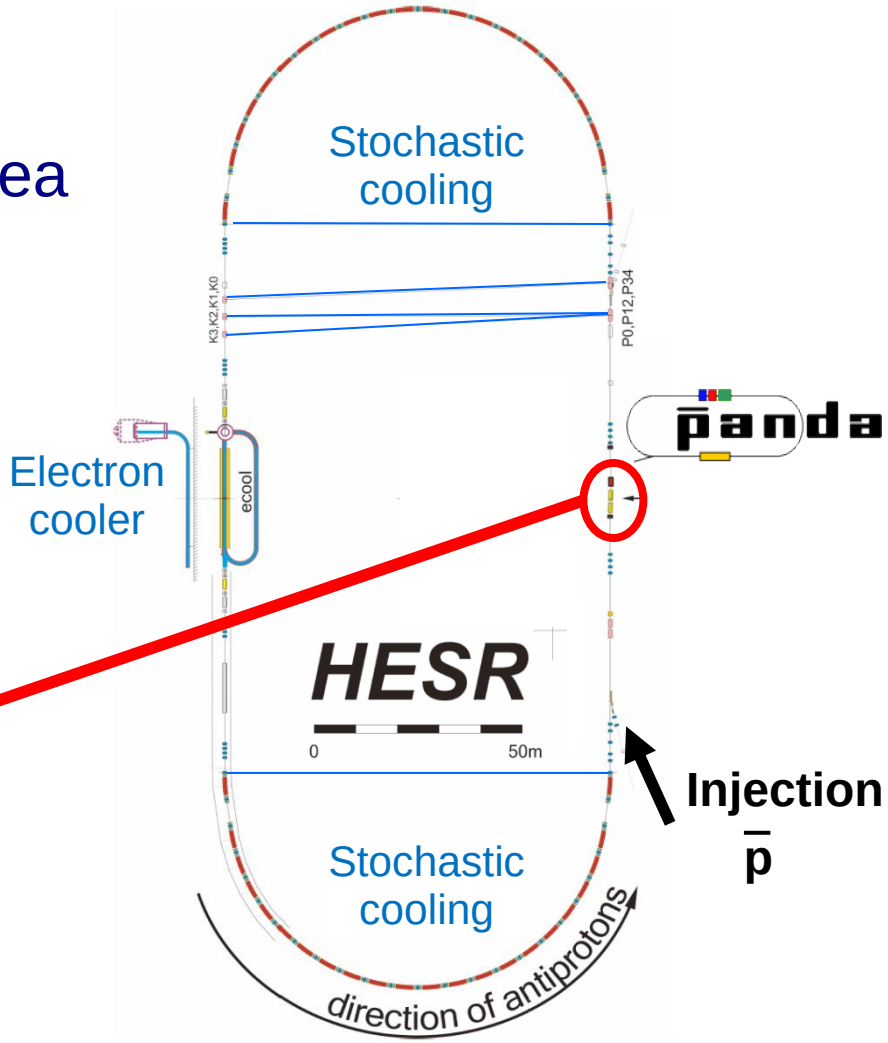

Introduction

- $\bar{p}$anda - Physics program
  - Study of charmonium systems: $q\bar{q}$ potential models
    → Precision measurements below and above $D\bar{D}$ threshold
    → Discovery potential for new states
  - Search for exotic QCD states (glueballs, hybrids)
  - Charmed and multi-strange spectroscopy
  - Electromagnetic processes ($p\bar{p} \rightarrow e^+e^- / \gamma\gamma$, Drell Yan)
  - Properties of single and double hypernuclei
  - Properties of hadrons in nuclear matter

→ M. Fritsch HK 13.2

Introduction

- $\bar{p}$anda - Experiment
  - Fixed target experiment
  - Frozen hydrogen and heavier nuclear targets (e.g. Gold)
  - Pellet target / Cluster-jet target
  - Design parameters

    a) High luminosity: $L = 2 \cdot 10^{32}\ cm^{-2}\ s^{-1} \Leftrightarrow \Delta p/p < 10^{-4}$

    b) High resolution: $L = 10^{31}\ cm^{-2}\ s^{-1} \Leftrightarrow \Delta p/p < 4 \cdot 10^{-5}$

    Beam momentum: (1.5 ... 15) GeV / c

    → Interaction rate: $2 \cdot 10^{7}$ events / s

    → Non-ordered time structure

Introduction

- $\bar{p}$anda - Spectrometer

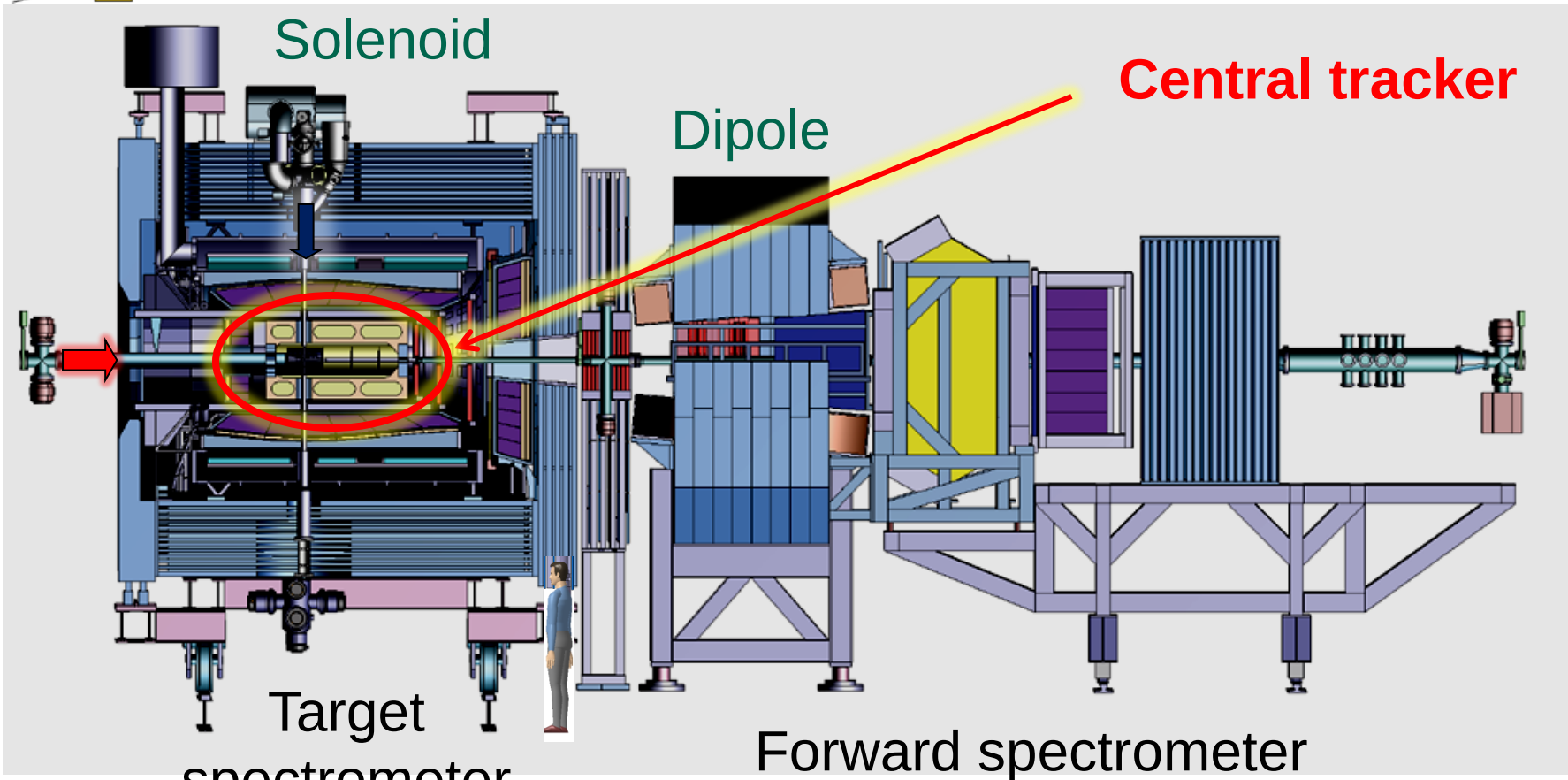

Introduction

- $\bar{p}$anda - Experiment: Particle distribution
  - Enhanced emission in forward direction
  - Low-energetic particles (< 1 GeV/c) in full polar angle

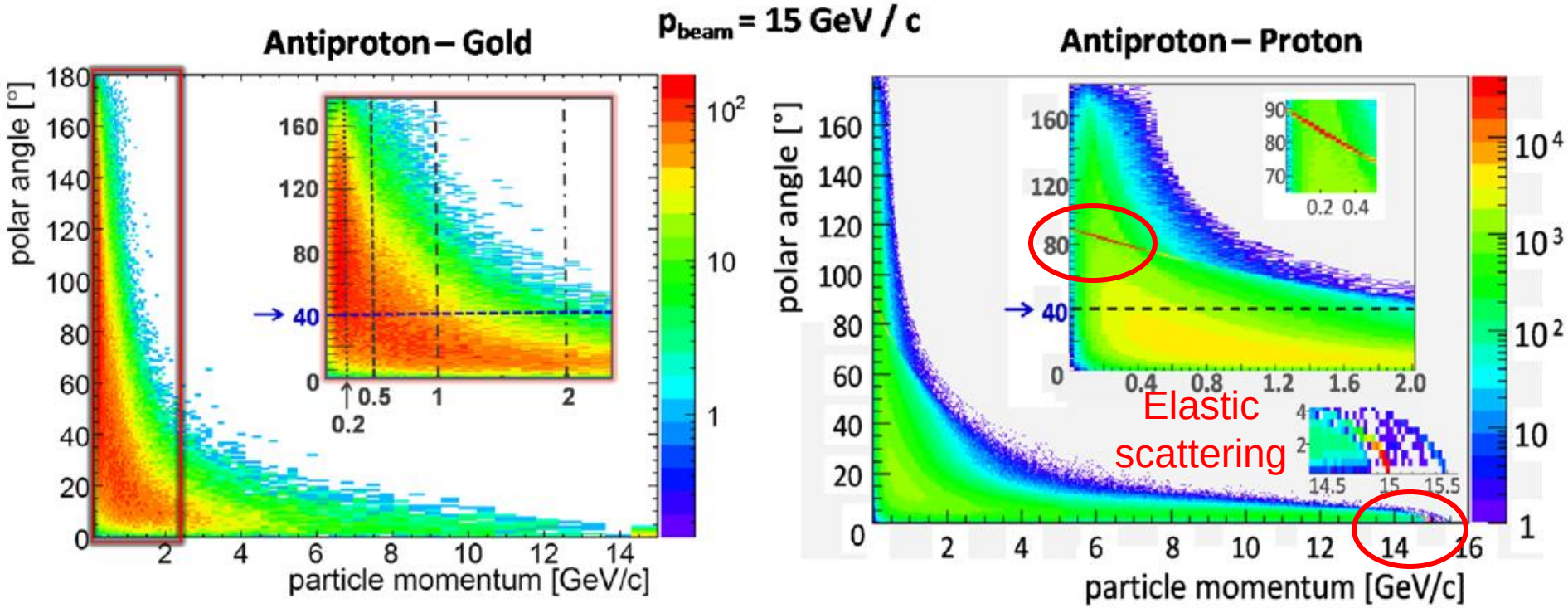

Introduction

- p̄anda - Experiment: Particle distribution
  - Enhanced emission in forward direction (light targets)
  - Low-energetic particles (< 1 GeV/c) over full polar angle

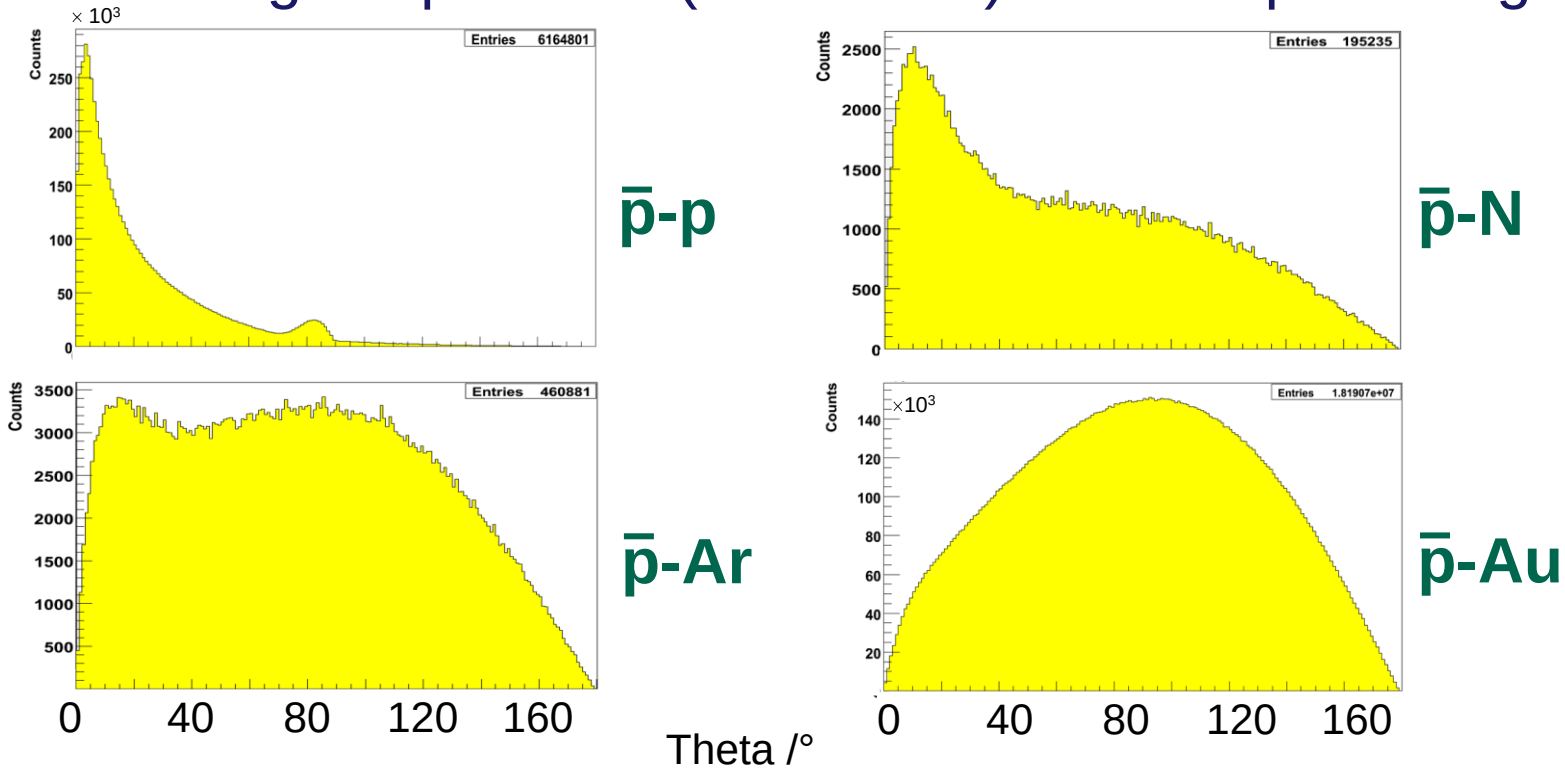

General description

- Micro-Vertex-Detector (MVD)
  - **Tracking detector** for charged particles
  - **Innermost** detector in PANDA
  - **Main tasks:**

    (1) High vertex resolution for primary interaction vertex and secondary vertices of short lived particles and delayed decays

    (2) Improvement of momentum resolution

    (3) Additional input for particle-ID

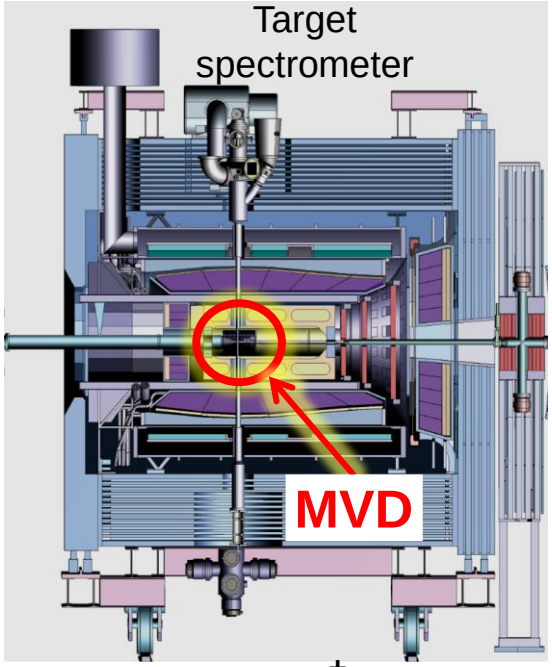

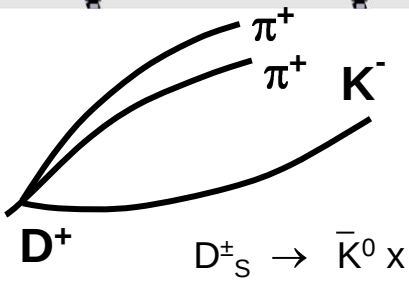

$D^{\pm} \rightarrow \bar{K}^0 x + K^0 y$

$c\tau = 312\ \mu m$

$D^{\pm}_S \rightarrow \bar{K}^0 x + K^0 y$

$c\tau = 147\ \mu m$

Requirements

- **Good spatial resolution and high spatial coverage**
  - r-phi ↔ Momentum measurement (e.g. soft pions D* decay)
  - z ↔ Vertexing, D-tagging
- **Good time resolution** (< 10 ns) ↔ Quasi continuous beam
- **Amplitude** measurements ↔ Improvement of spatial resolution and PID
- **Radiation tolerance** (~10^{14} $n_{eq\ (1\ MeV)}$ cm^{-2} / 10 years)
- **Triggerless readout** ↔ No first level hardware trigger
- **Low material budget**

General layout

- Micro-Vertex-Detector (MVD)
  - Central part:
    Four barrel layers
  - Forward part:
    Six disk layers
  - Detector types:
    - ✓ Pixel sensors
    - ✓ Double-sided microstrip sensors

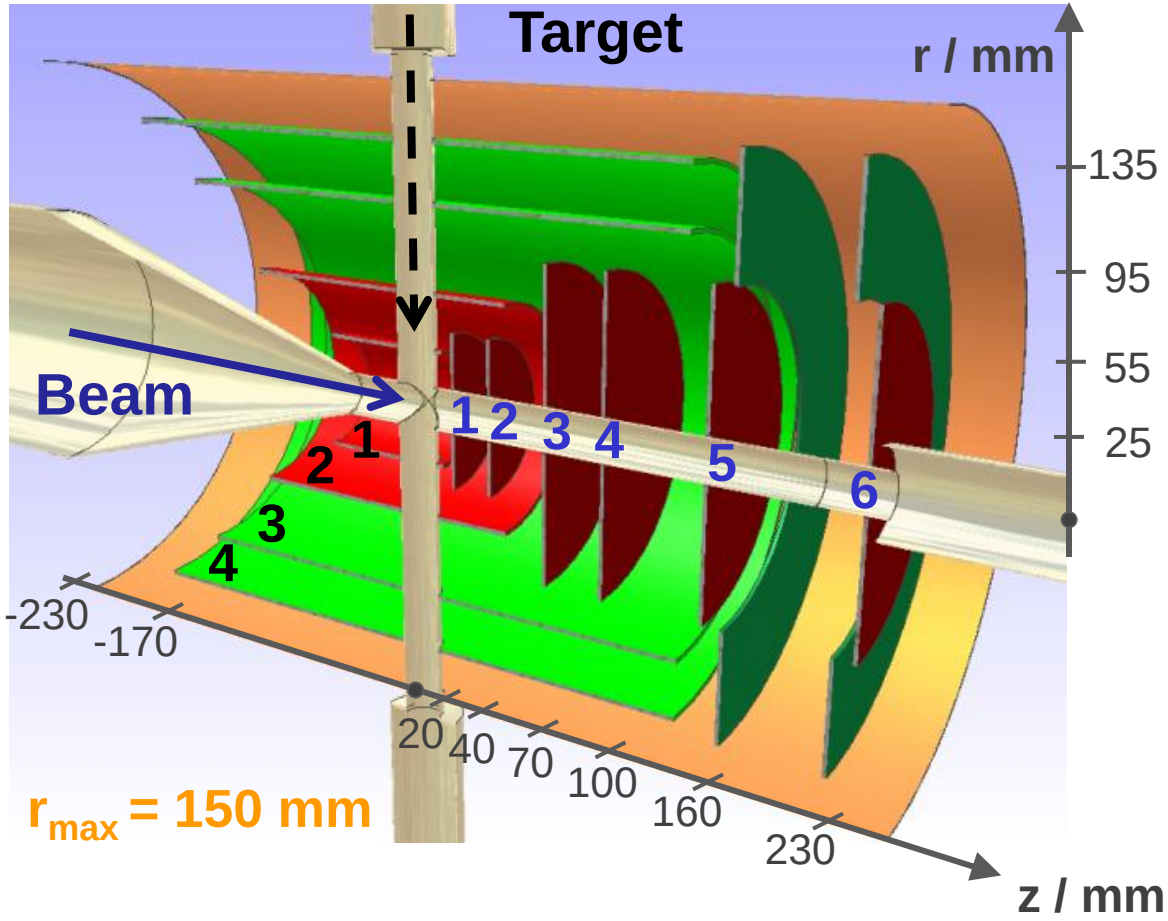

Implementation

- Micro-Vertex-Detector (MVD)
  - Central part:
    Four barrel layer
  - Forward part:
    Six disk layer
  - Detector types:
    - ✓ Pixel sensors
    - ✓ Double sided microstrip sensors

Readout channels:

~ 12 million (pixel)

~ 200.000 (strip)

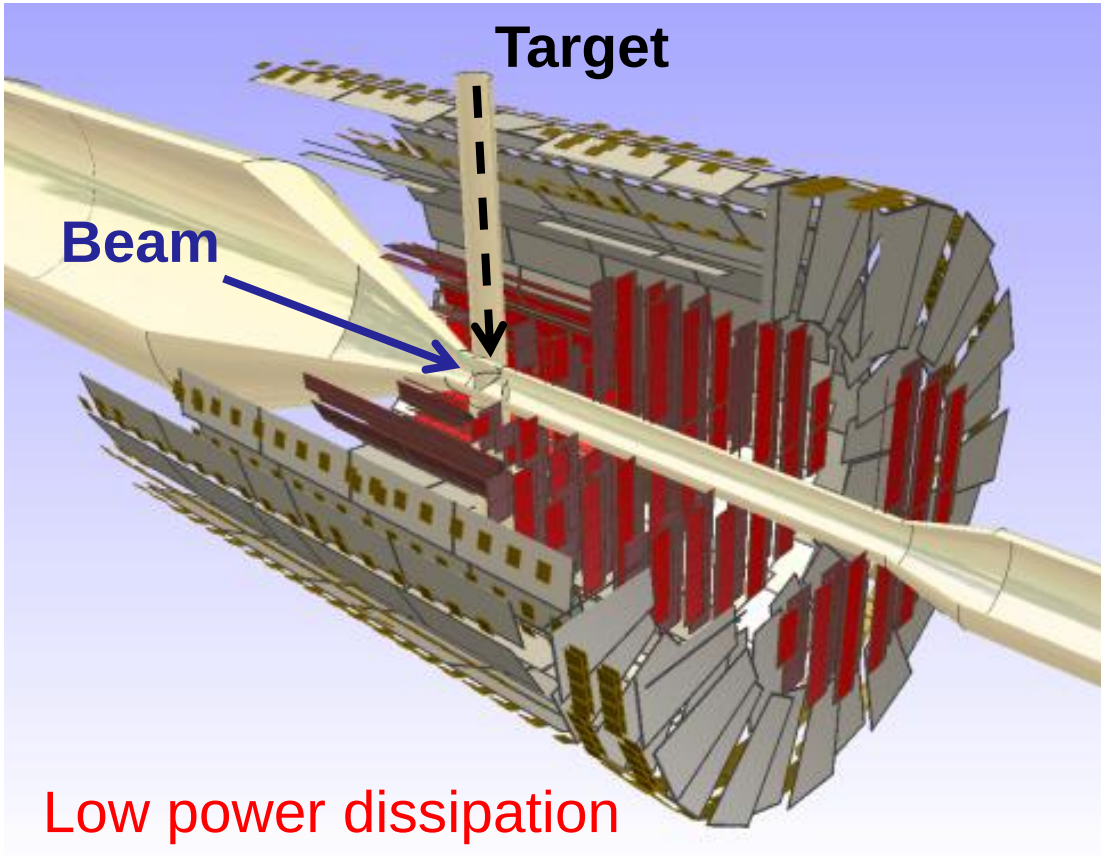

Low power dissipation
for frontend electronics required

Implementation

- Pixel sensor

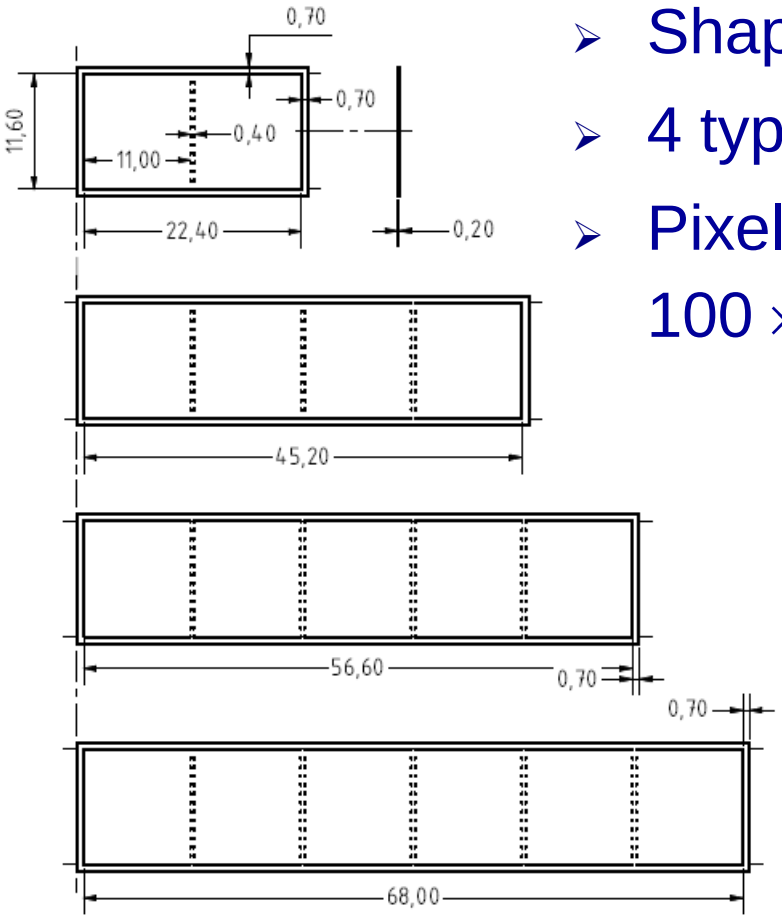

- Shape: Rectangular
- 4 types of different lengths
- Pixel cell size:
  $100 \times 100\ \mu m^2$

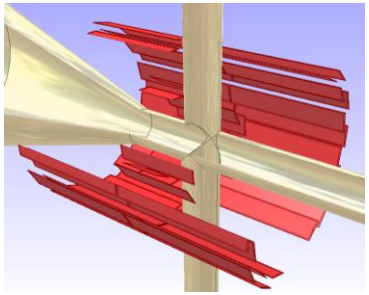

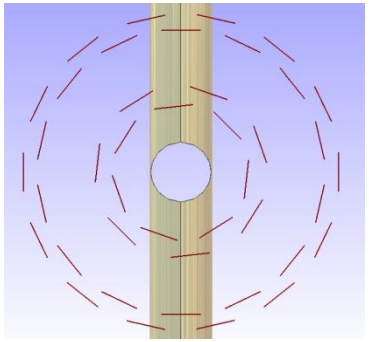

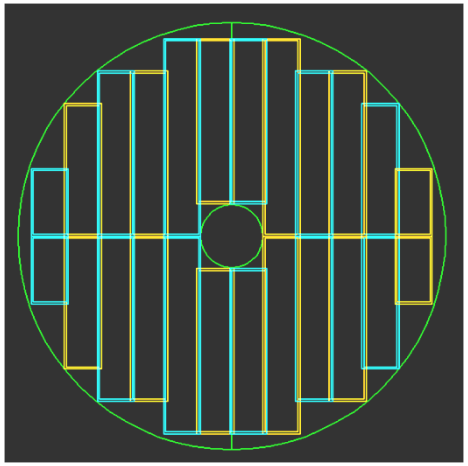

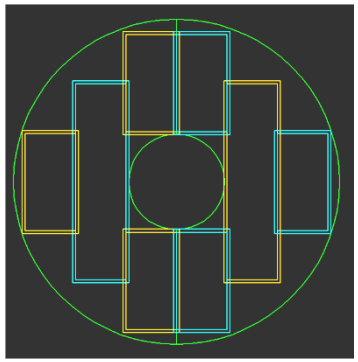

Implementation

- Hybridization: Pixel module

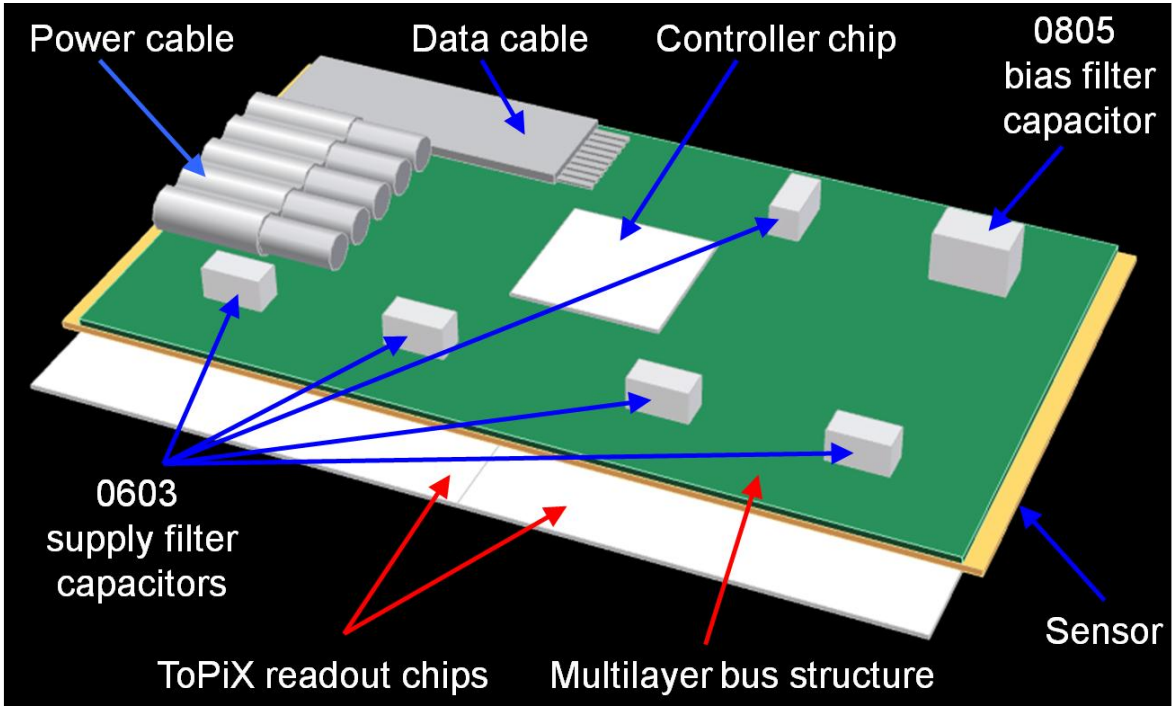

Standard hybrid technology

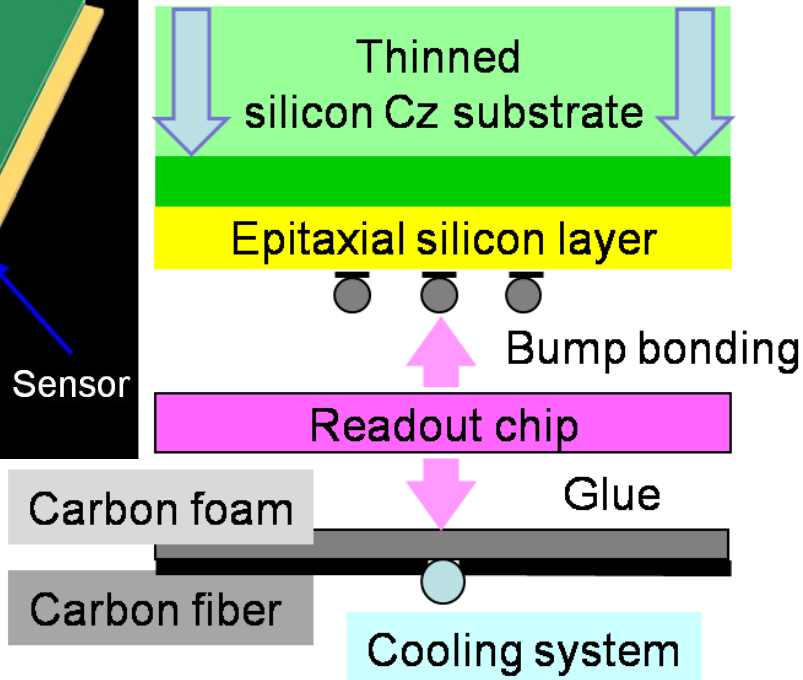

Hardware development

- Pixel sensor
  - Specifications
    - ✓ Epi-Silicon layer: (50 ... 100) μm
    - ✓ Thinned substrate: ~ 50 μm
    - ✓ *Alt.:* Thinned oxygen enriched silicon
  - Measurements
    - ✓ Sensor characterization
    - ✓ Radiation damage test (neutrons)

Chip sensor from epi-wafer

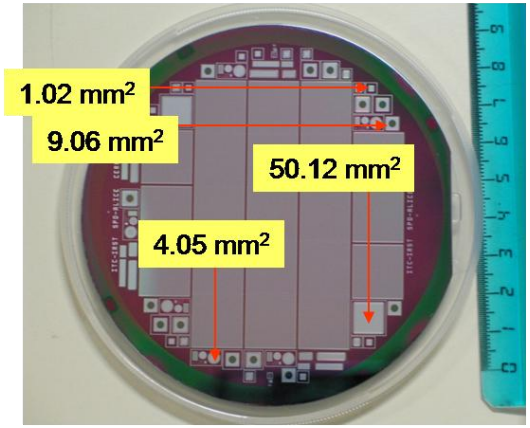

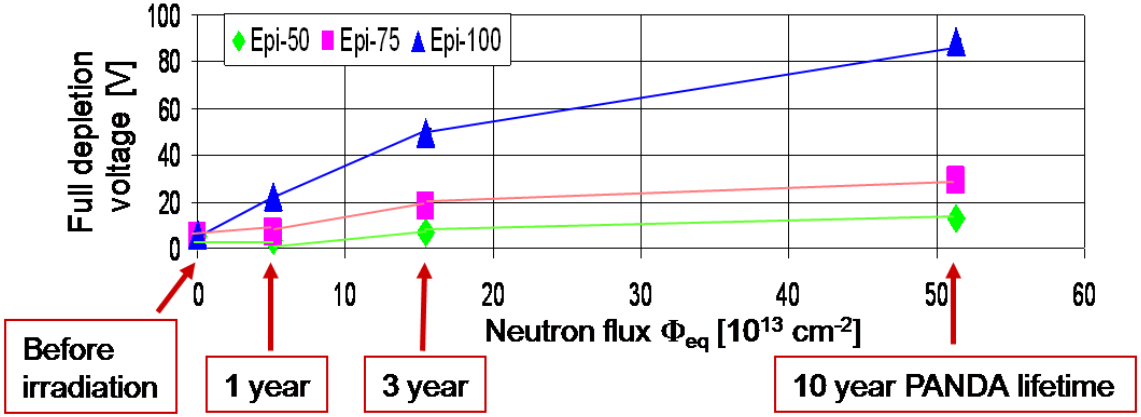

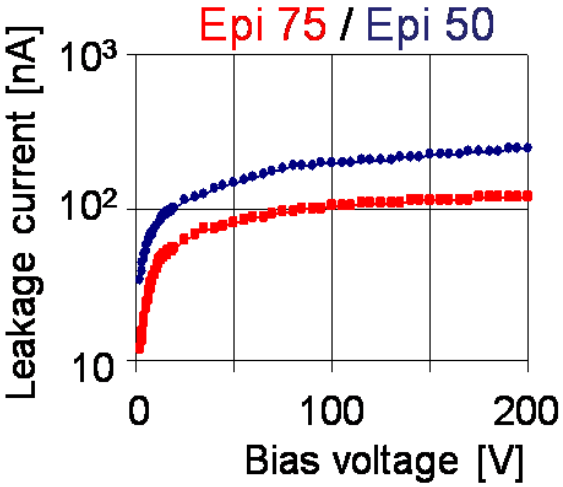

Hardware development

- ToPix readout chip
  - Specifications
    - ✓ Time over threshold technique for untriggered readout
    - ✓ CMOS 130 nm technology
    - ✓ 116 × 110 pixel matrix (100 × 100 μm^2 cell size)
    - ✓ Low power consumption (< 500 mW/cm^2)
  - Measurements
    - ✓ Testing procedures

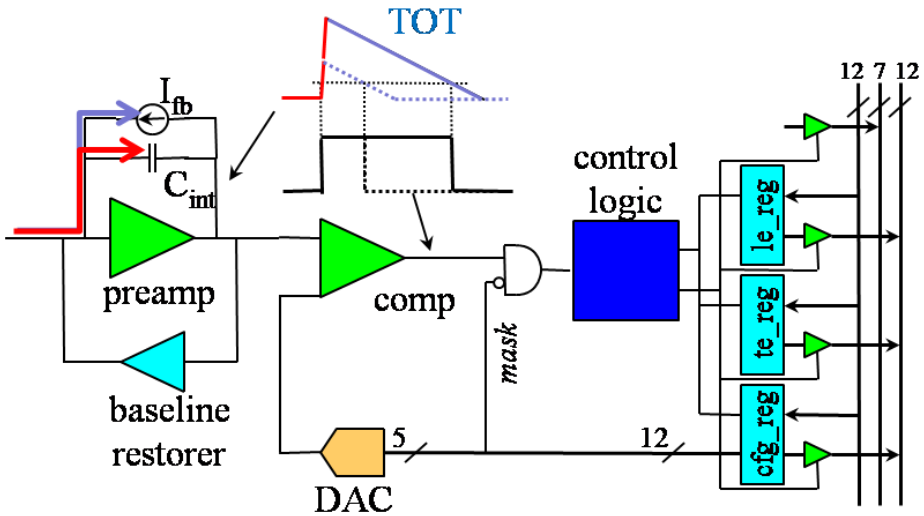

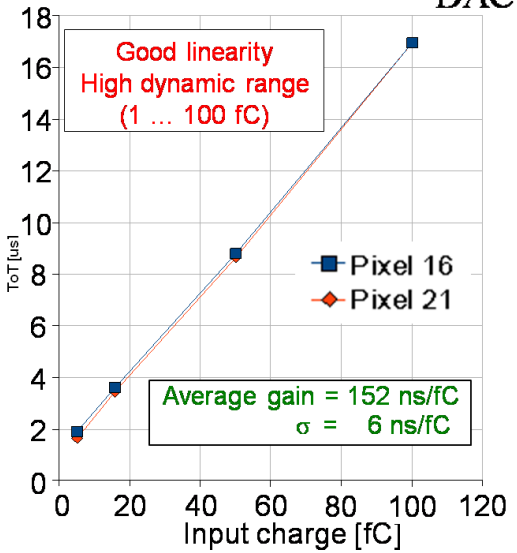

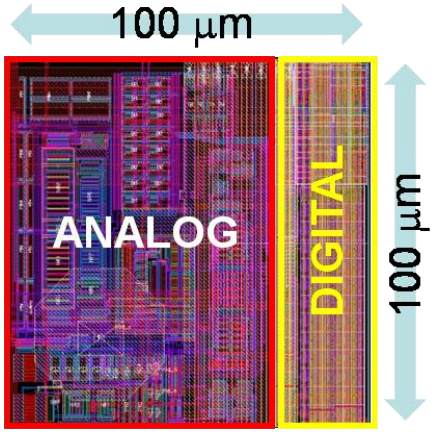

Hardware development

- ToPix readout chip
  - Specifications
    - ✓ Time over threshold technique for untriggered readout
    - ✓ CMOS 130 nm technology
    - ✓ 100 × 100 pixel matrix (100 × 100 μm^2 cell size)
    - ✓ Low power consumption (< 500 mW/cm^2)
  - Measurements
    - ✓ Testing procedures
    - ✓ Total ionizing dose test with X-rays

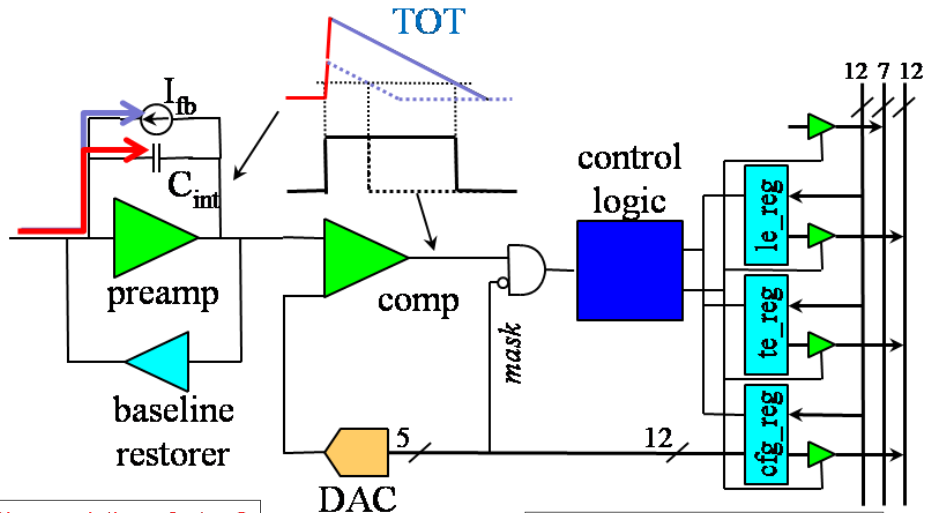

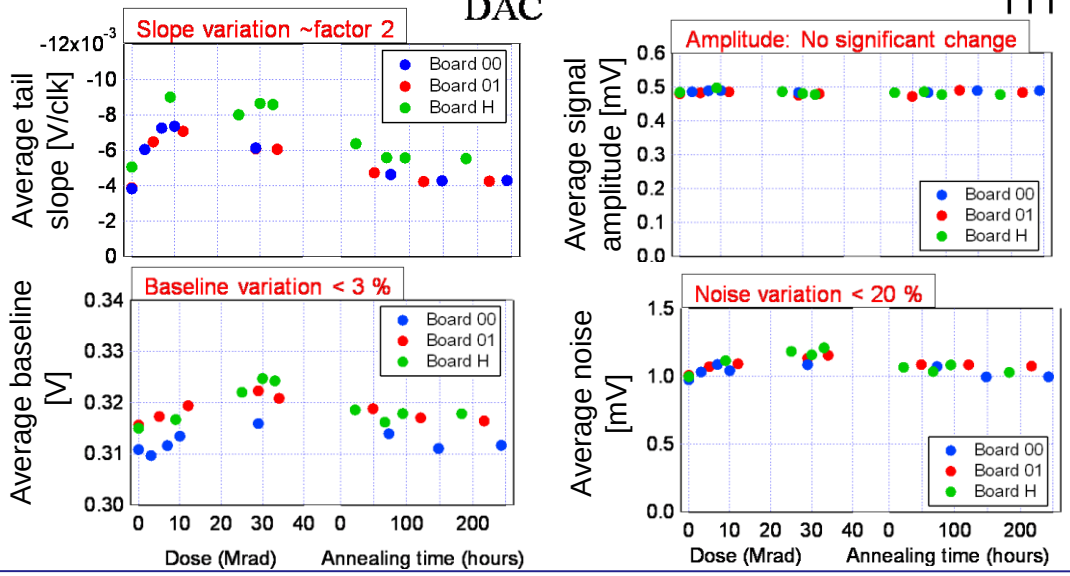

Hardware development

- ToPix readout chip
  - Specifications
    - ✓ Time over threshold technique for untriggered readout
    - ✓ CMOS 130 nm technology
    - ✓ 100 × 100 pixel matrix (100 × 100 μm^2 cell size)
    - ✓ Low power consumption (< 500 mW/cm^2)
  - Measurements
    - ✓ Testing procedures
    - ✓ Total ionizing dose test
    - ✓ ToPix prototype connected to epi-sensor

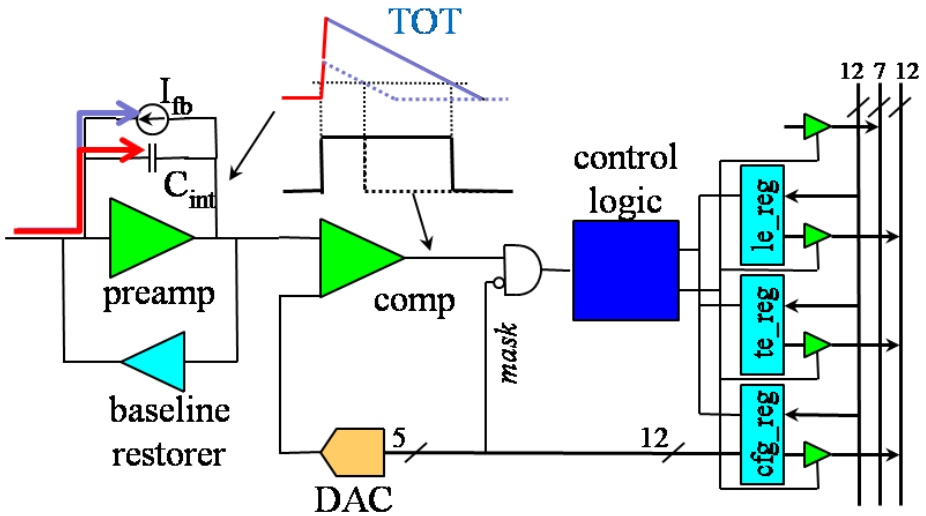

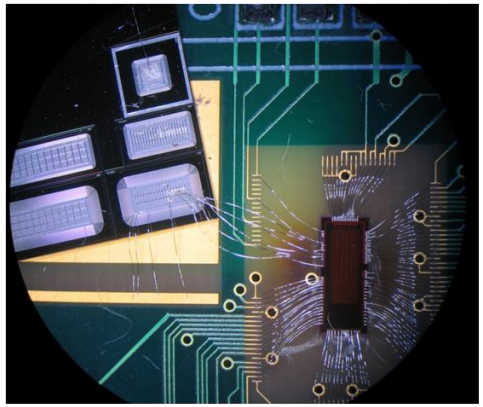

ToPix + epitaxial sensor

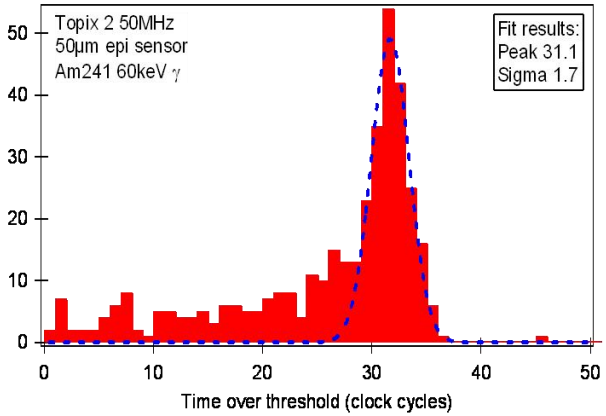

TOT calibration

Implementation

- Strip sensor
  - Shape:
    Trapezoidal (disk)
    Rectangular (barrel)
  - Readout: Pitch / stereo angle:
    130 μm / 90° (barrel)
    70 μm / 15° (disk)

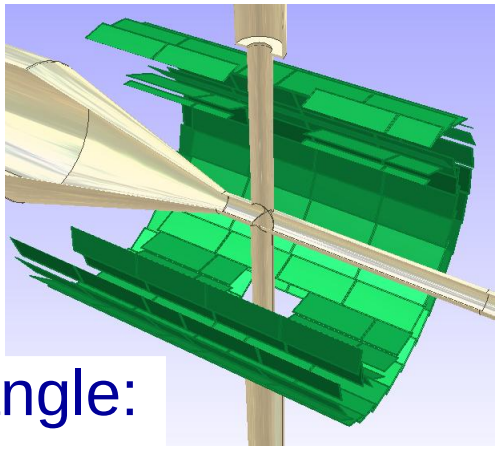

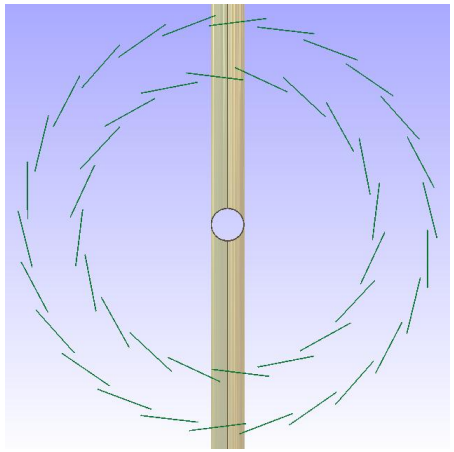

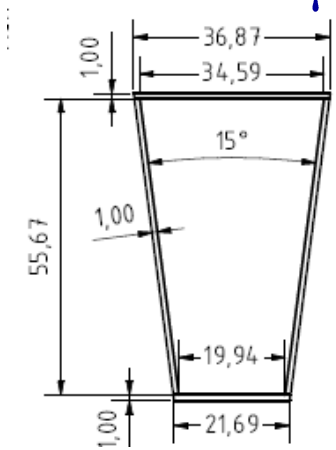

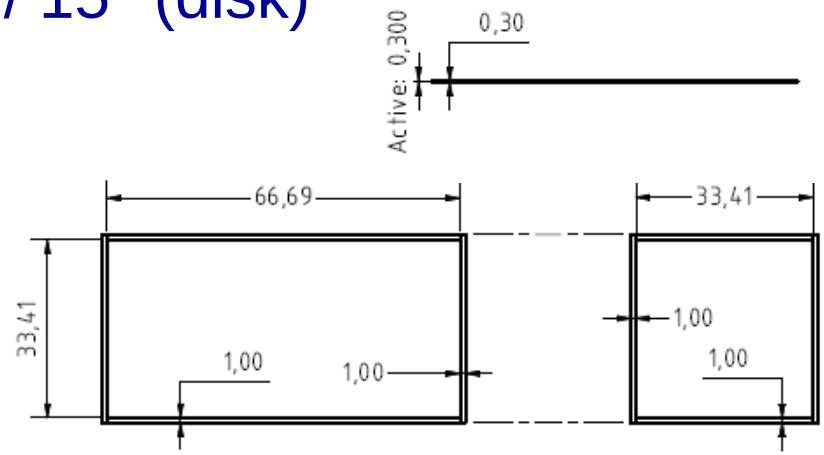

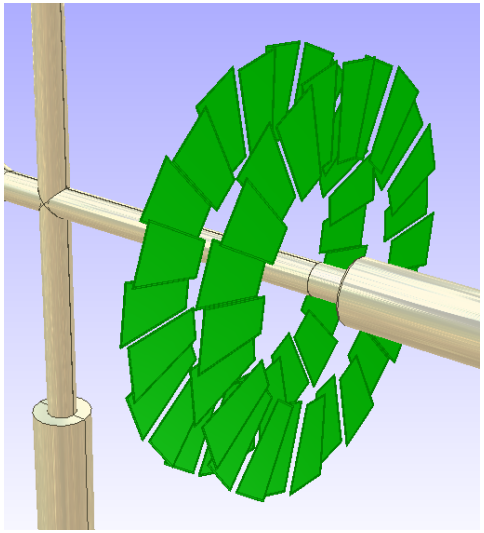

Implementation

- Hybridization: Strip module

Disk part

Readout along sensor sides

Bending at top

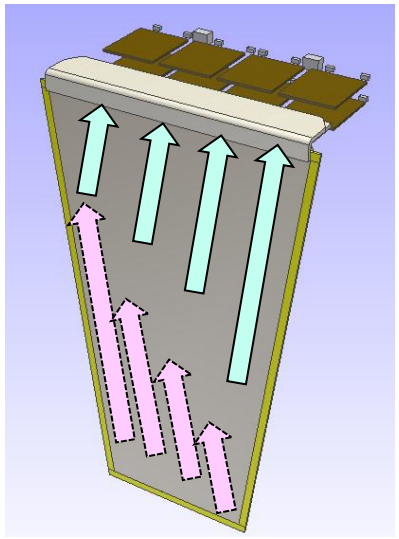

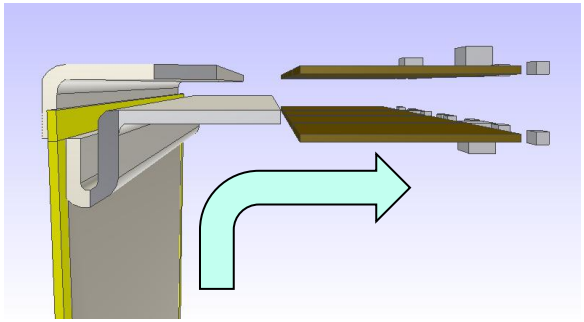

Barrel part

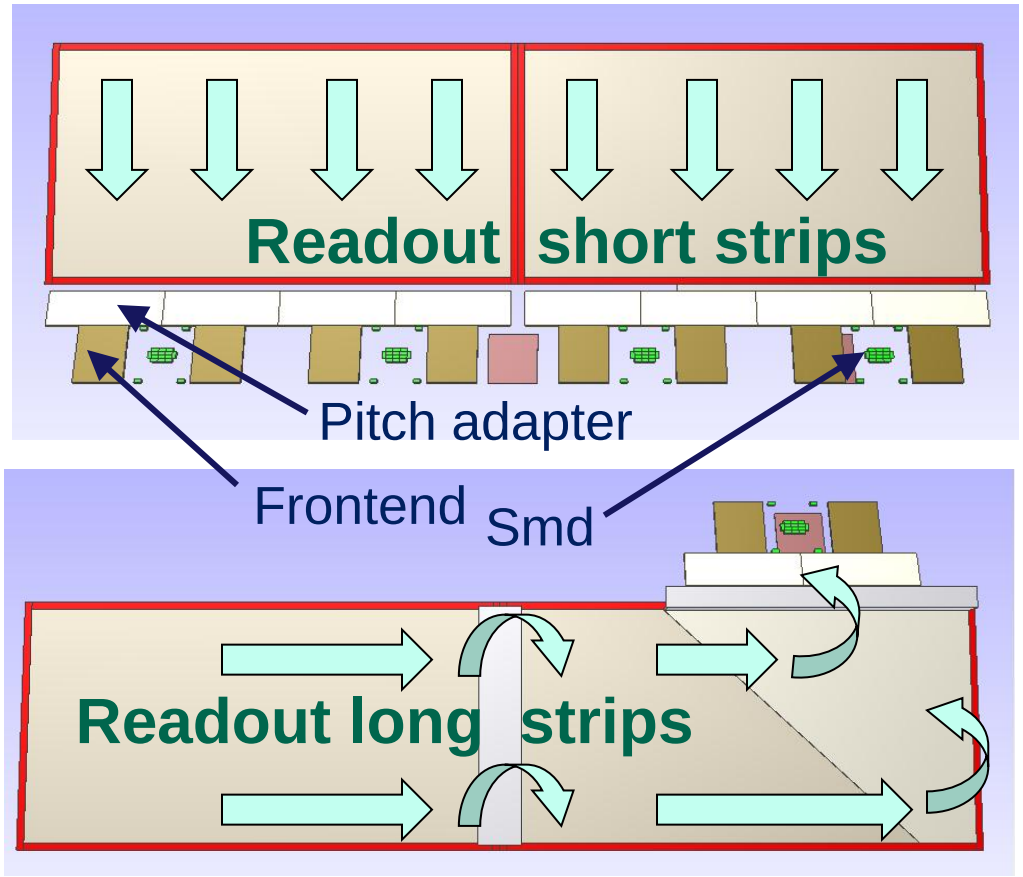

Implementation

- Hybridization: Strip super-module

Disk part

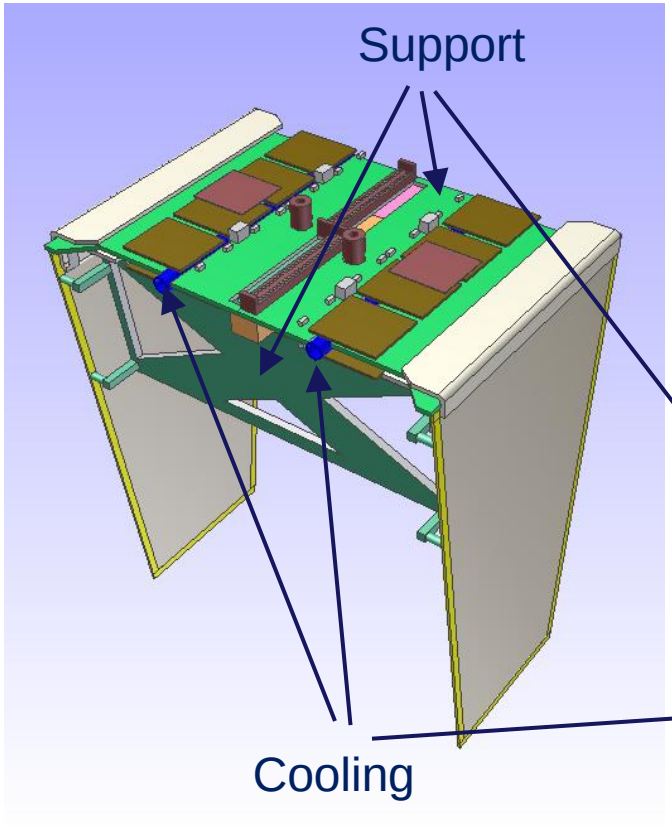

Barrel part

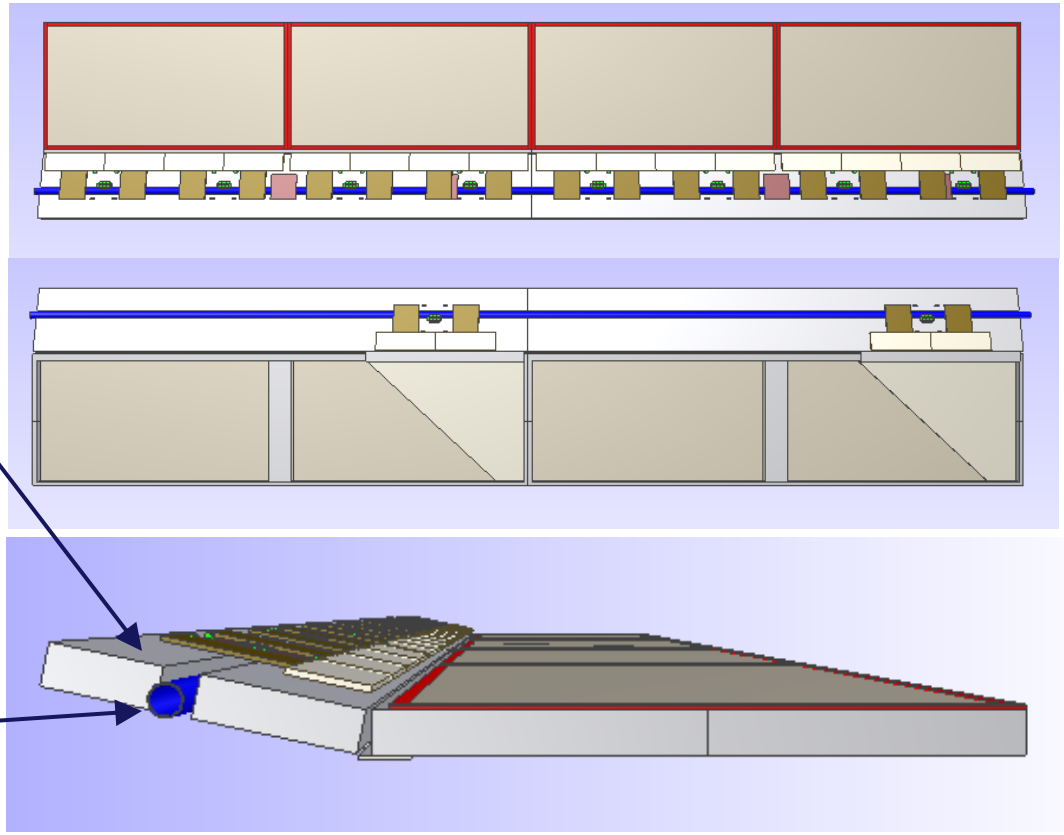

Hardware development

- Test system for strip sensors

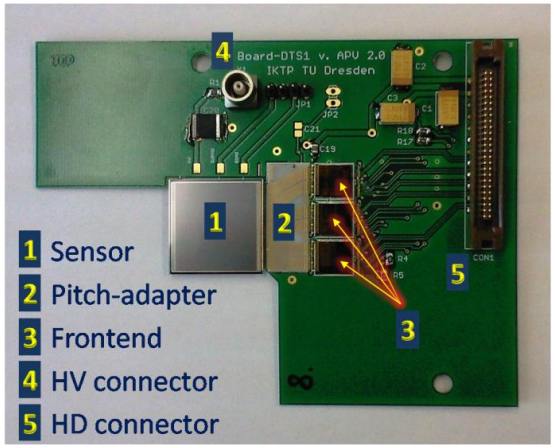

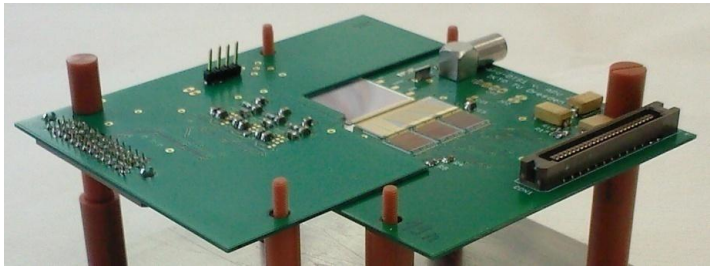

↑ Tracking Station at COSY beam time

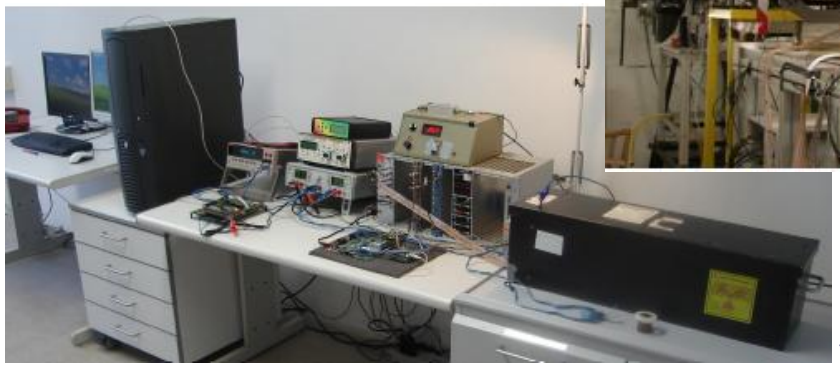

← Lab setup

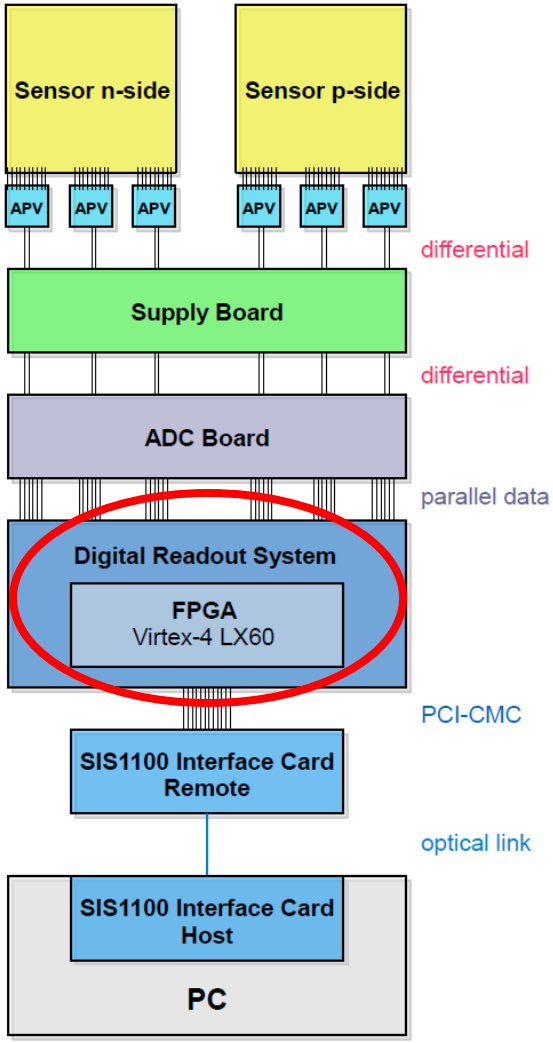

From lab-scale test system to tracking station

Hardware development

- Test system for strip sensors

Sensor characterization

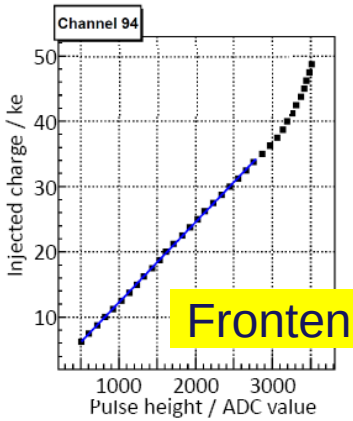

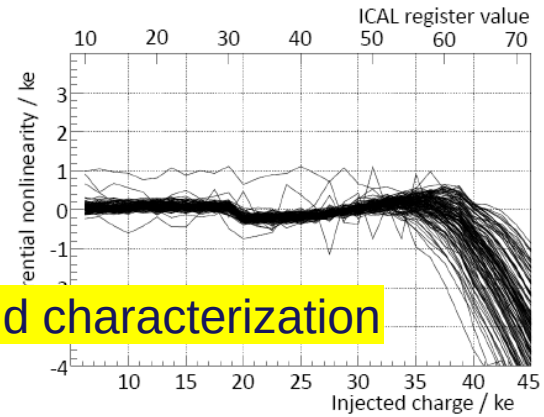

Frontend characterization

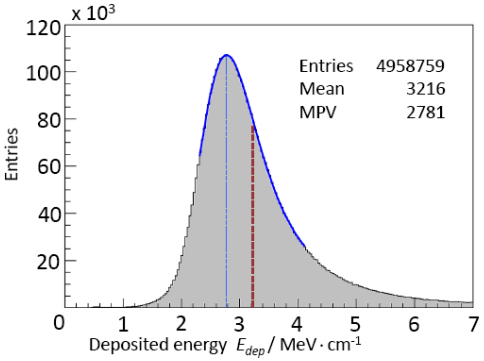

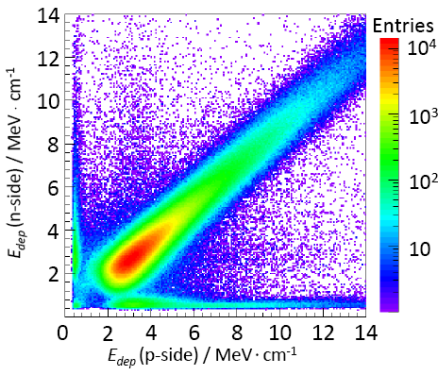

DPG contributions:

→ R. Schnell HK 10.5
→ M. Becker HK 21.3
→ K. Koop HK 36.61

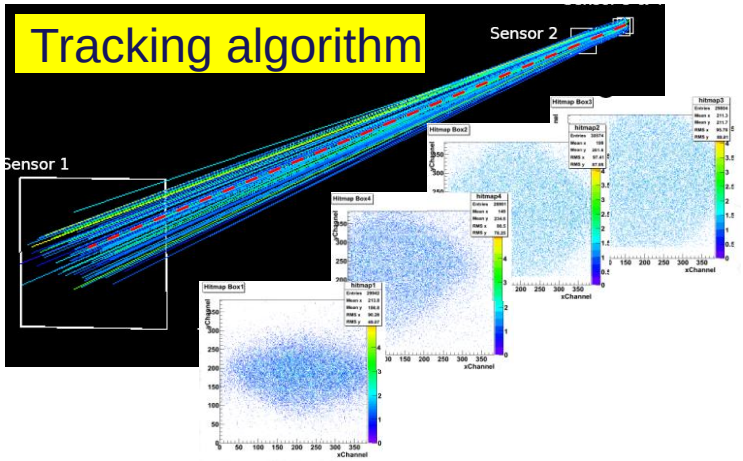

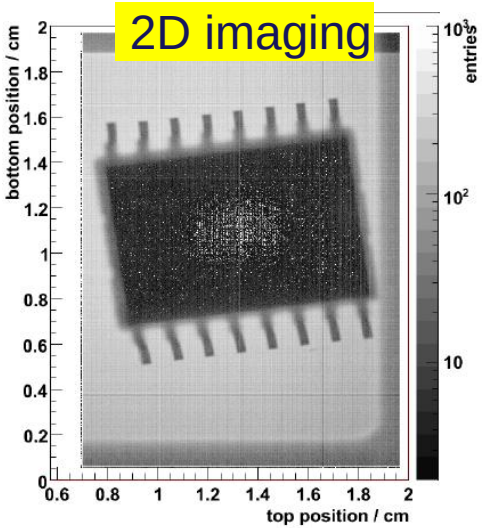

From lab-scale test system to tracking station

Hardware development

- Digital Readout system

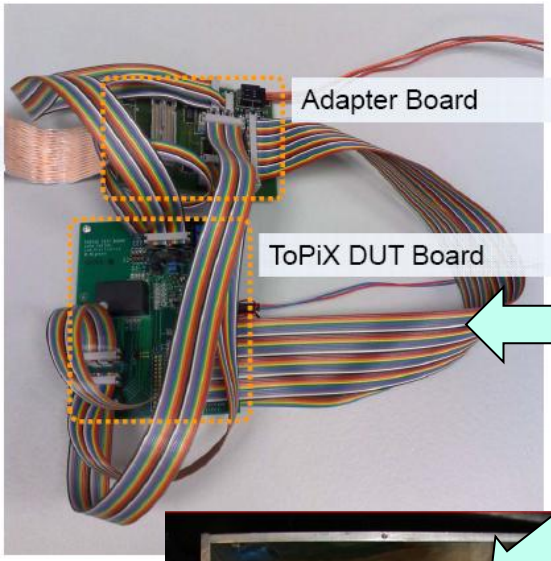

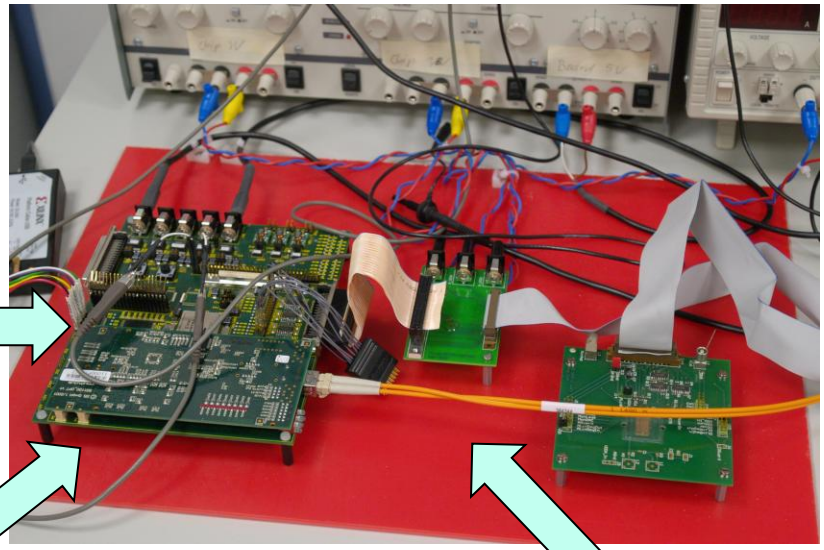

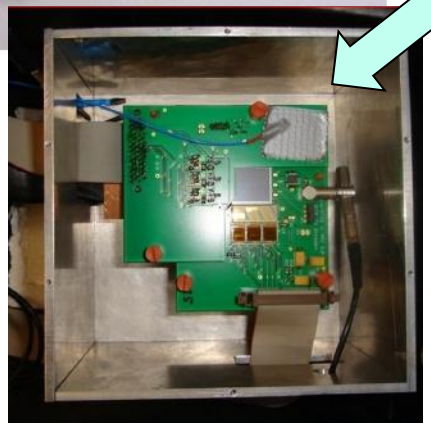

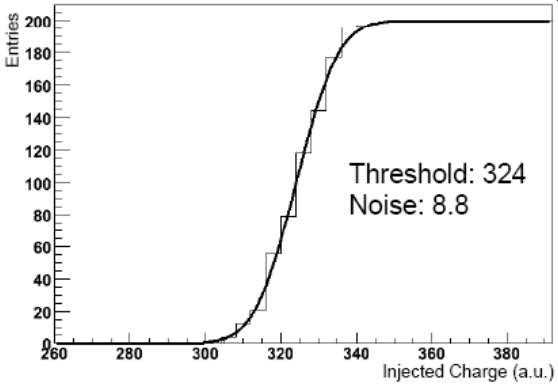

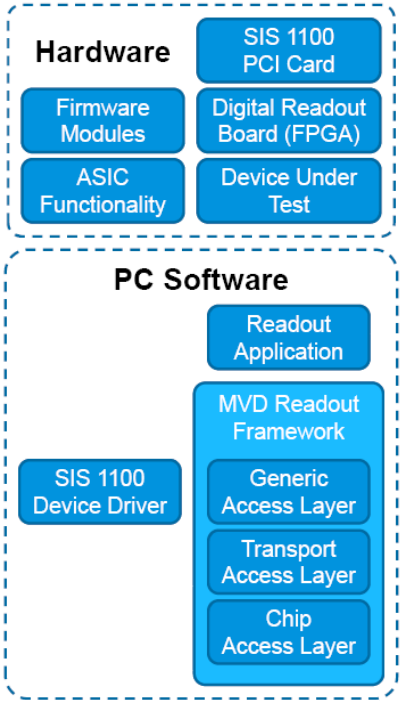

ATLAS FE 13 characterization

Noise distribution

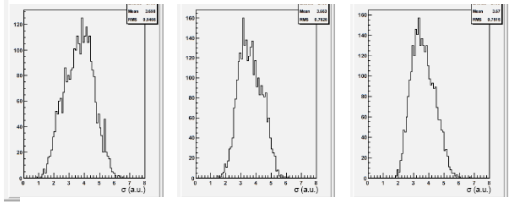

40 MHz 60 MHz 80 MHz

Mechanics aspects

- Overall detector integration

Global frame

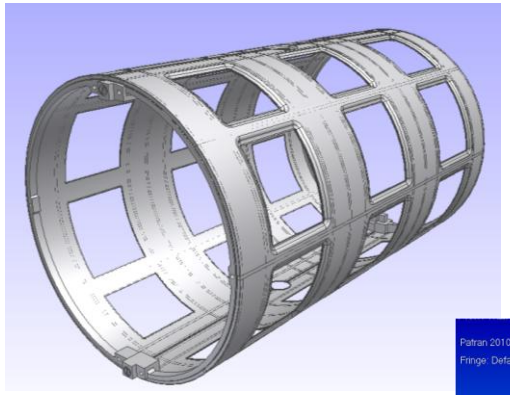

Carbon fibre structure

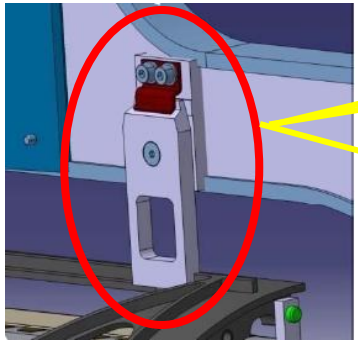

Central support frame

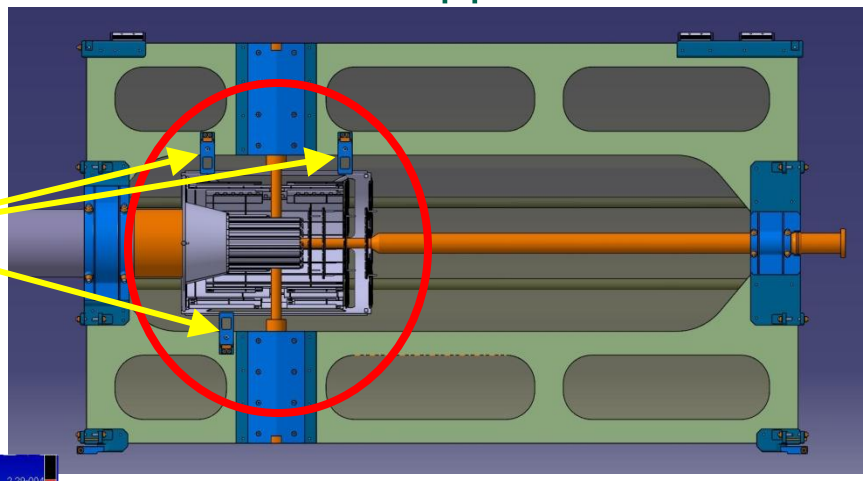

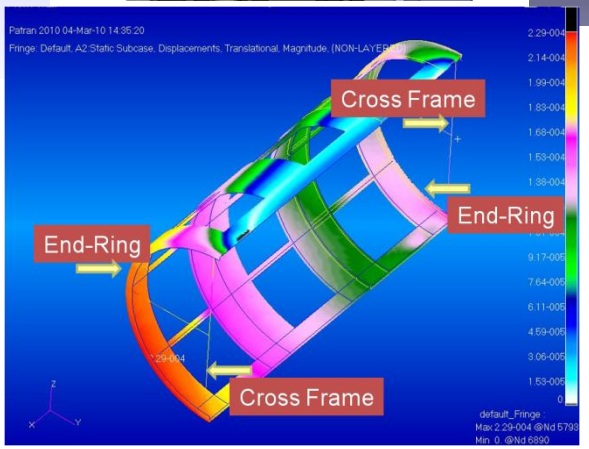

- ✓ 3 point fixation to central support frame
- ✓ 2 half frames
- ✓ Integration of all MVD parts
- ✓ Prototype commissioned

Mechanics aspects

- Support concept

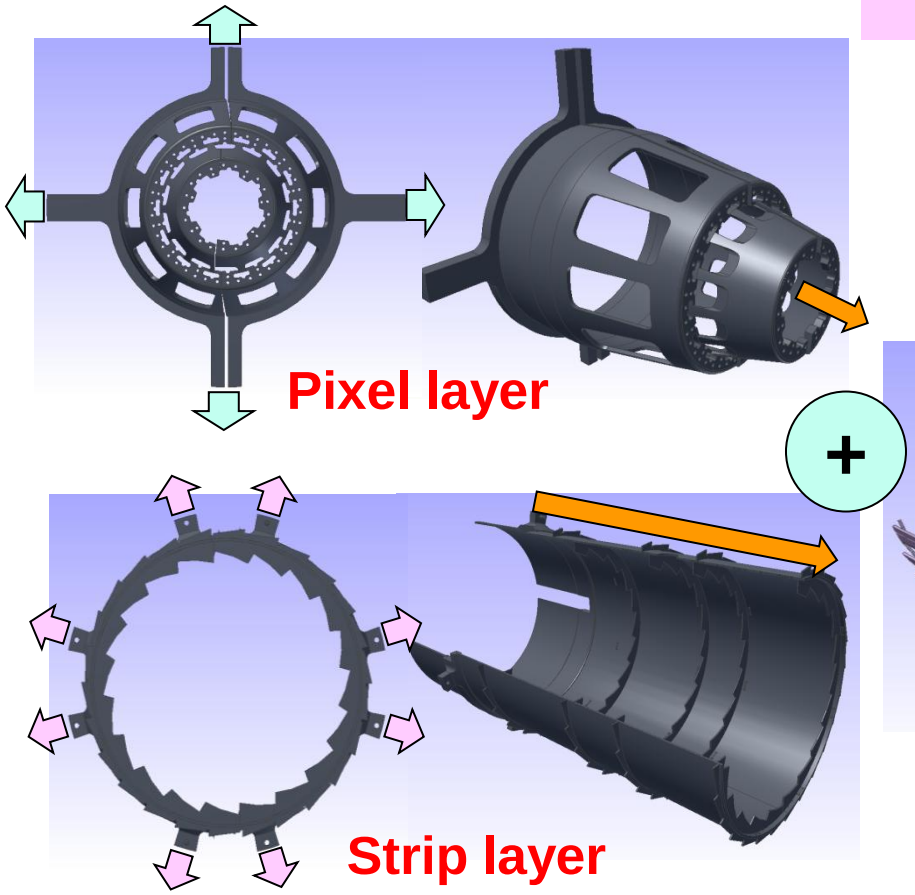

Barrel layer

- ✓ Staves hosting detector modules
- ✓ Pixel barrel layer: Upstream cone
- ✓ Strip barrel layer: Cylinder over full length, sawtooth structure

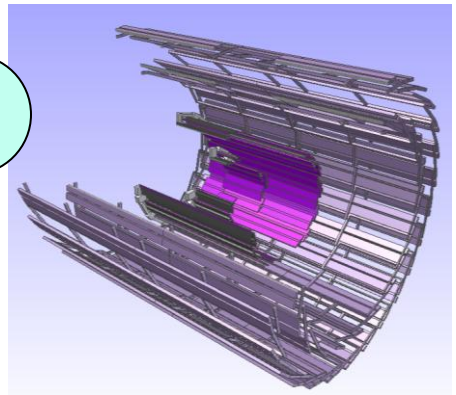

Carbon fibre / Carbon foam structure

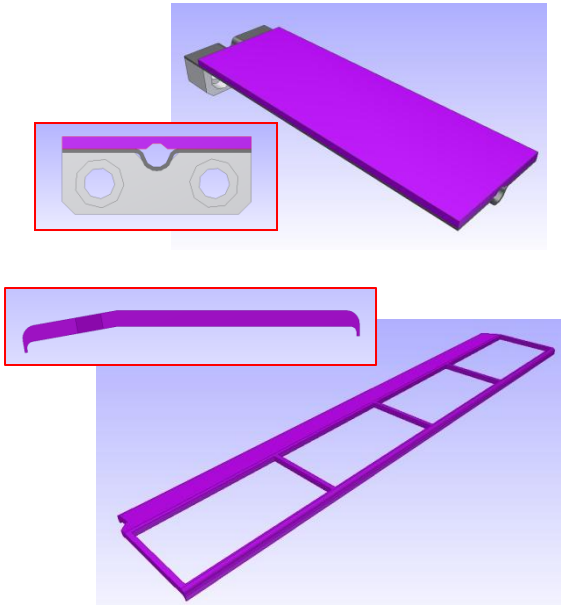

Mechanics aspects

- Support concept

Forward part

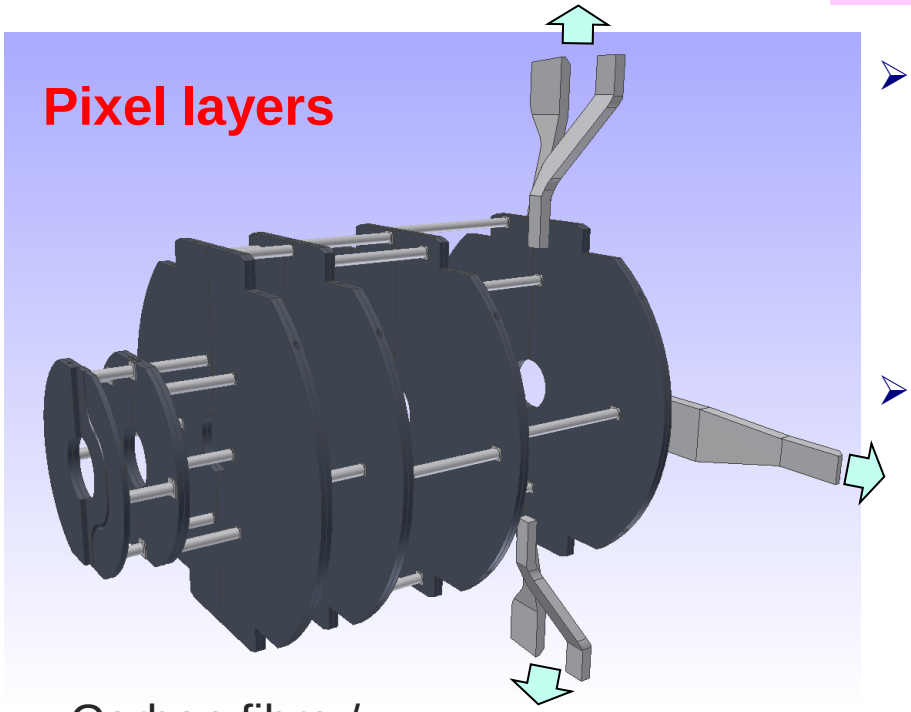

Carbon fibre / Carbon foam structure

- Pixel disks
  - ✓ Half-disks hosting detector modules
  - ✓ Spacers in between disk layers
  - ✓ Suspensors for attachment to frame
- Strip disks
  - ✓ Dedicated support for super-module
  - ✓ Support ring with fixed super-modules attached to frame

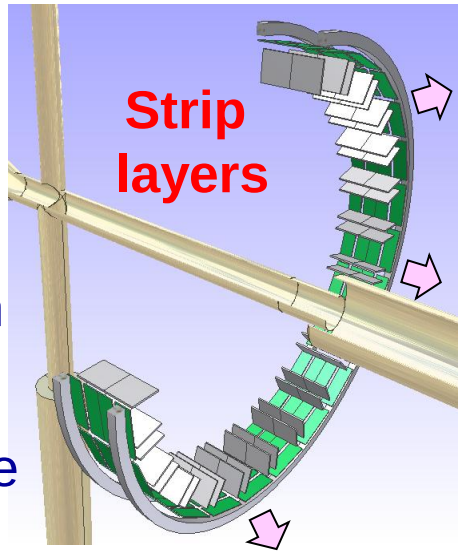

Carbon structures

- Light material support

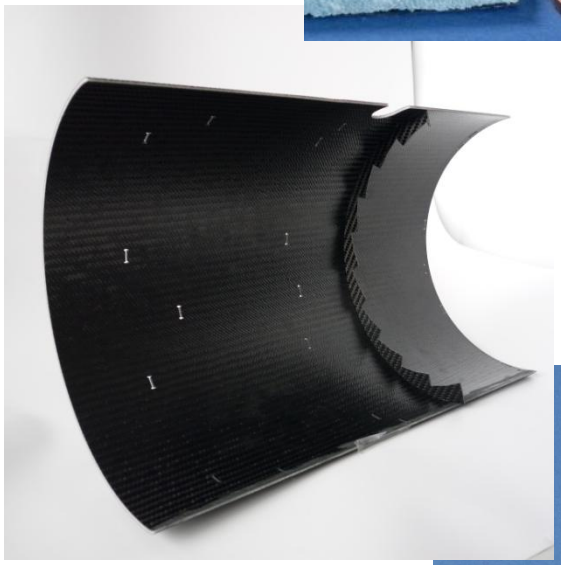

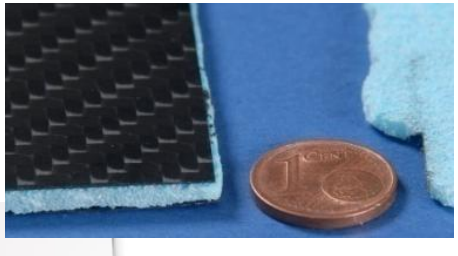

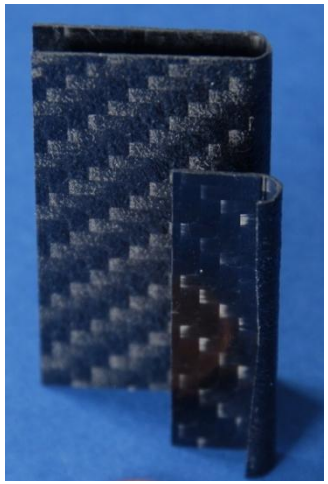

- Sandwich structure:
  (Carbon – Rohacell® – Carbon)
- Stiffening structure:
  2 layers of carbon fibre (400 μm)

Mechanics aspects

- Routing concept

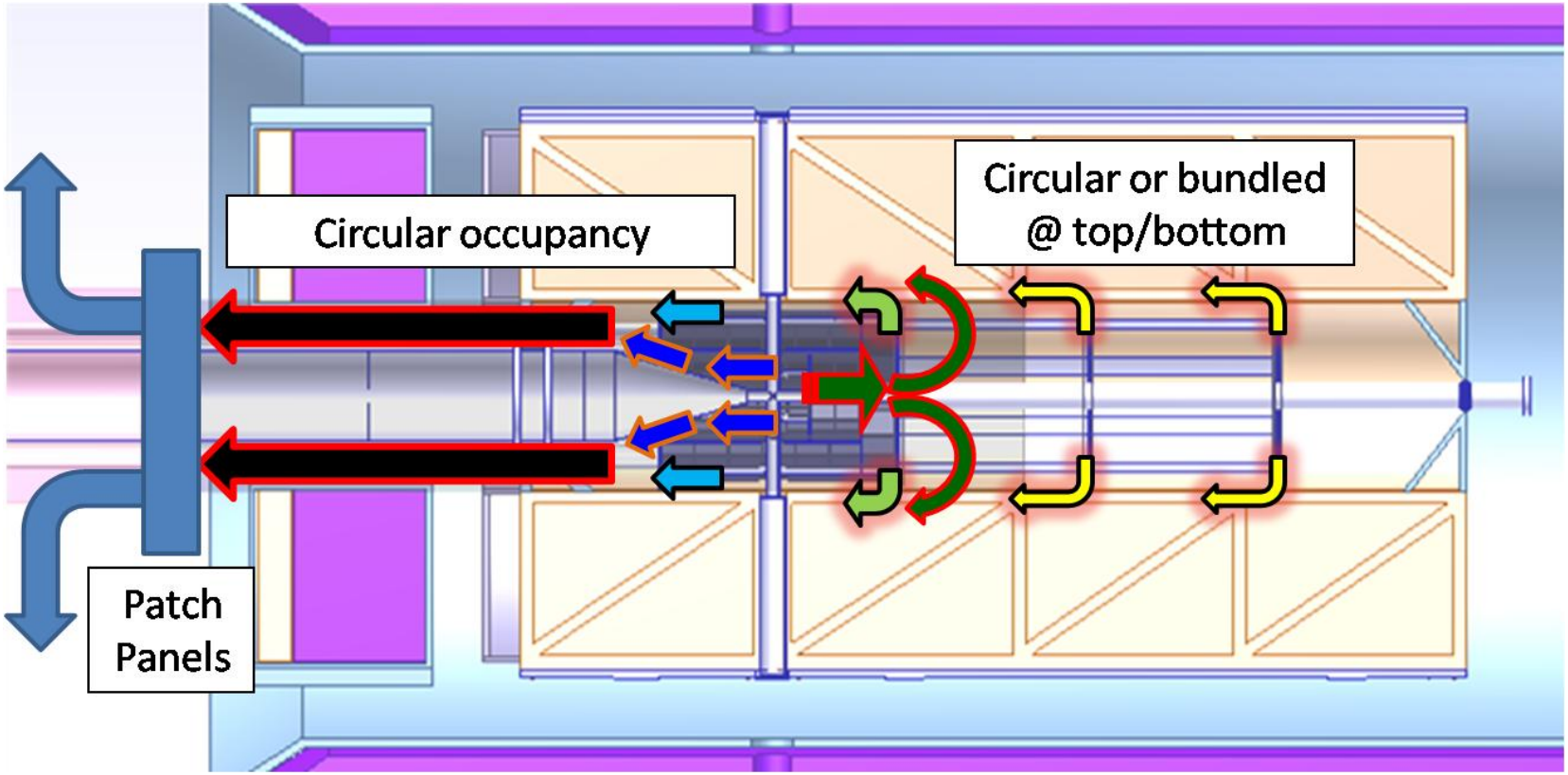

Mechanics aspects

- Routing concept
  - “Packets” for individual modules
  - Upstream routing along beam pipe
  - Dedicated routing for pixel disks

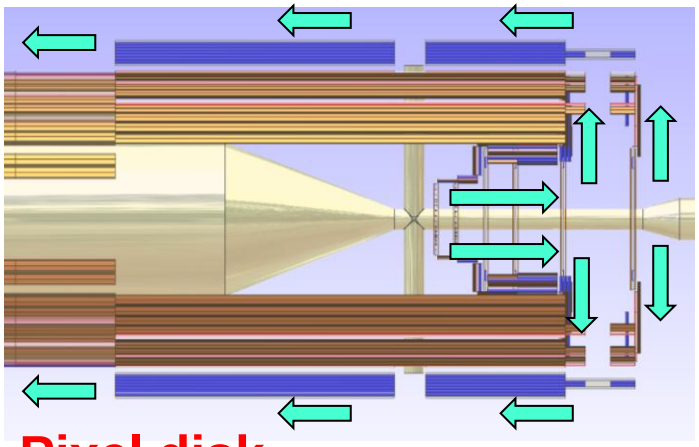

Pixel disk

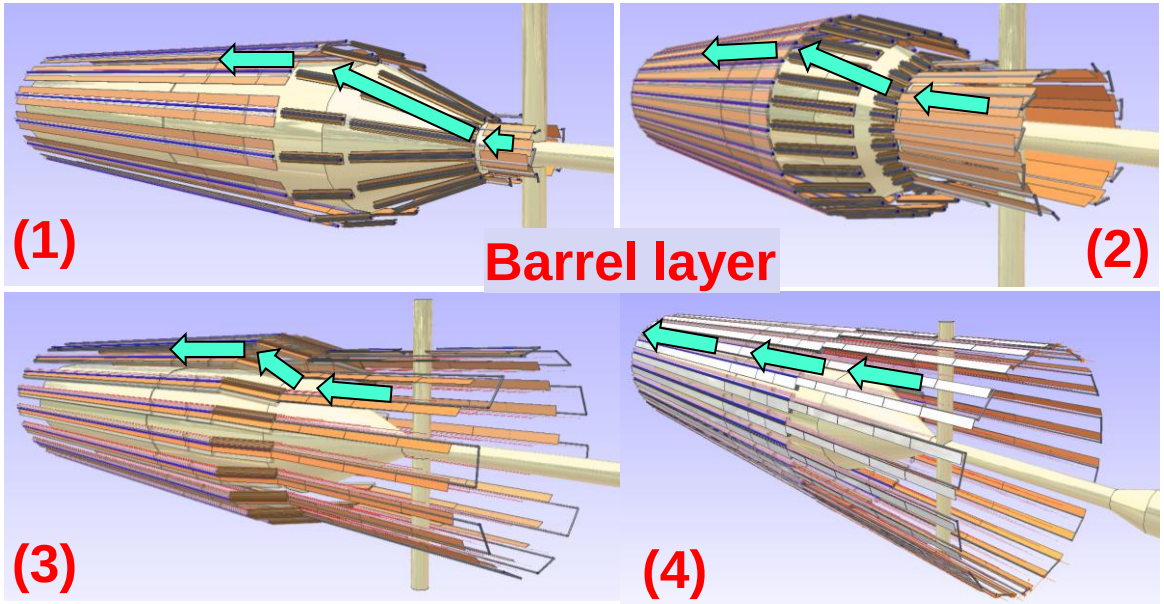

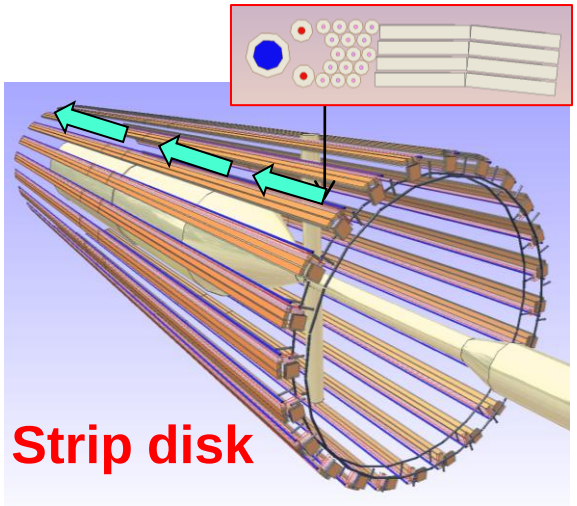

Mechanics aspects

- Routing concept

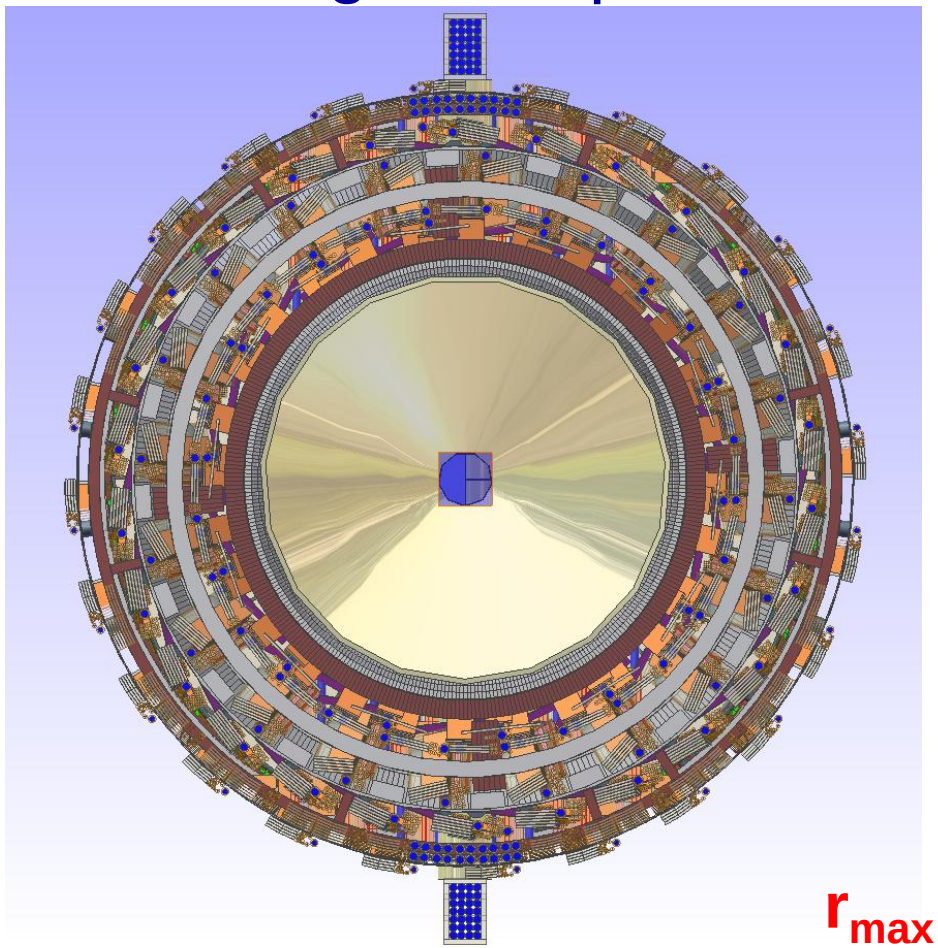

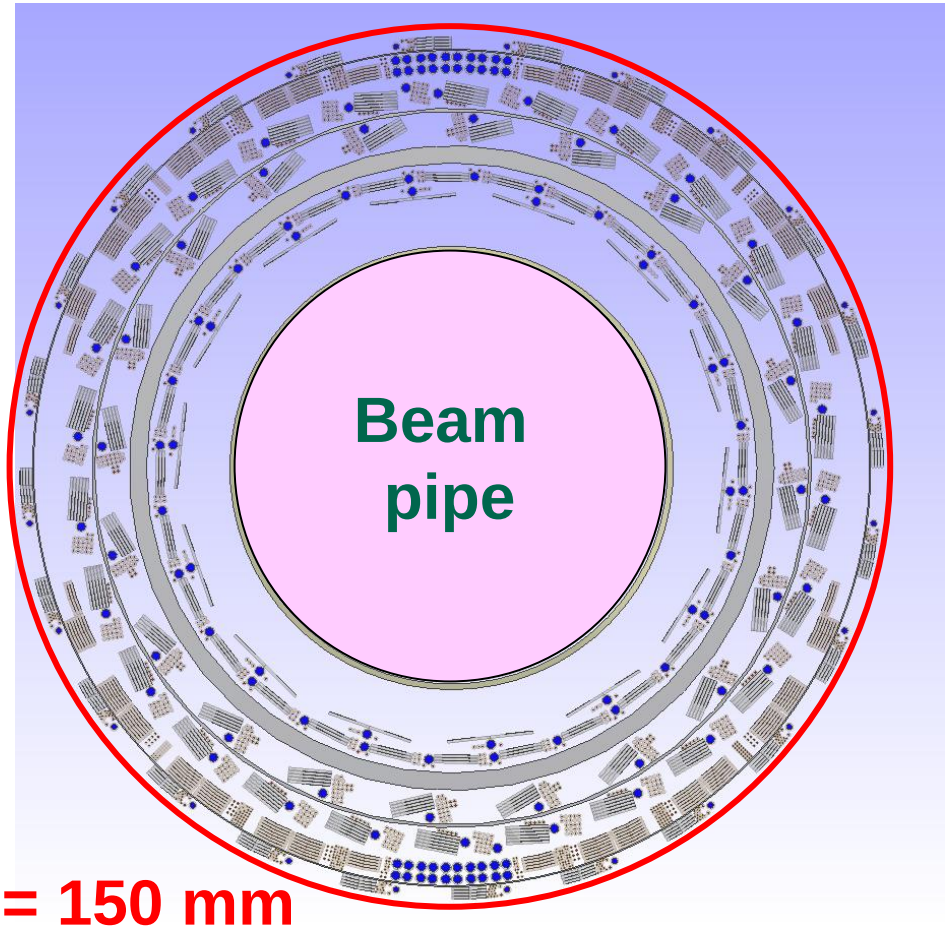

r_{max} = 150 mm

Mechanics aspects

- Cooling concept
  - Coolant: Water (18°C)
  - Under-pressure mode using hydrostatic pressure
  - Active part: ∅ 2 mm pipe (steel alloy)
  - Upstream routing: ∅ 4 mm flexible plastic pipes

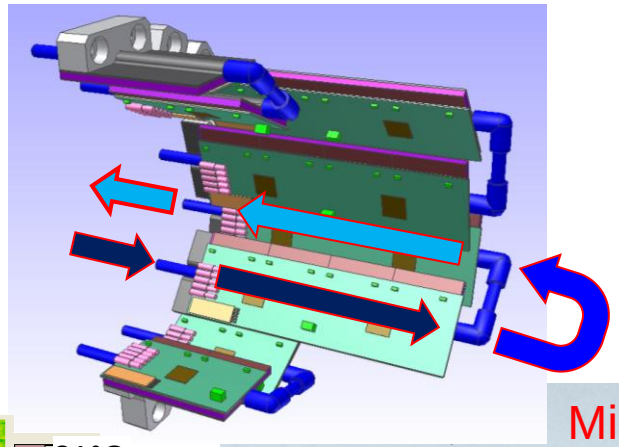

Barrel layer

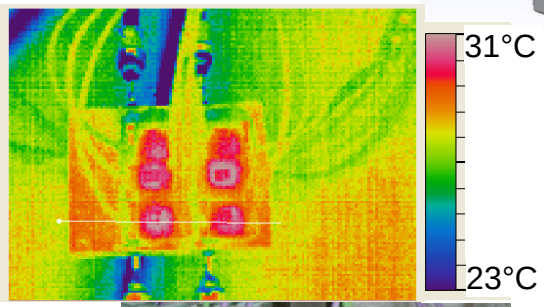

Micro fittings: Thermoplastic resin

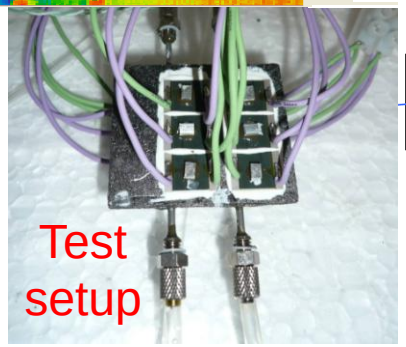

Test setup

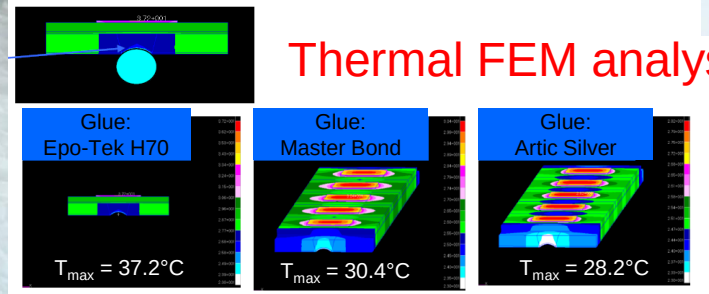

Thermal FEM analysis

Mechanics aspects

- Cooling concept
  - Coolant: Water (18°C)
  - Under-pressure mode using hydrostatic pressure

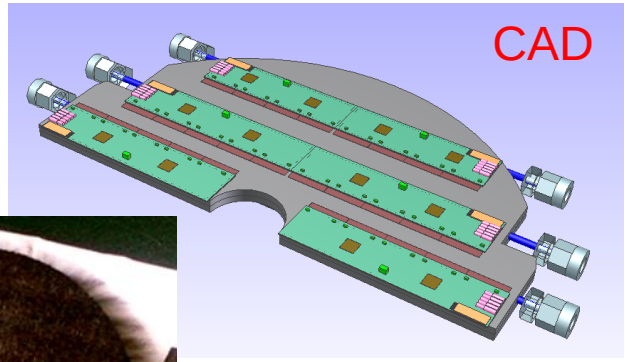

Disk layer

Carbon foam cutting

Drilling and baking

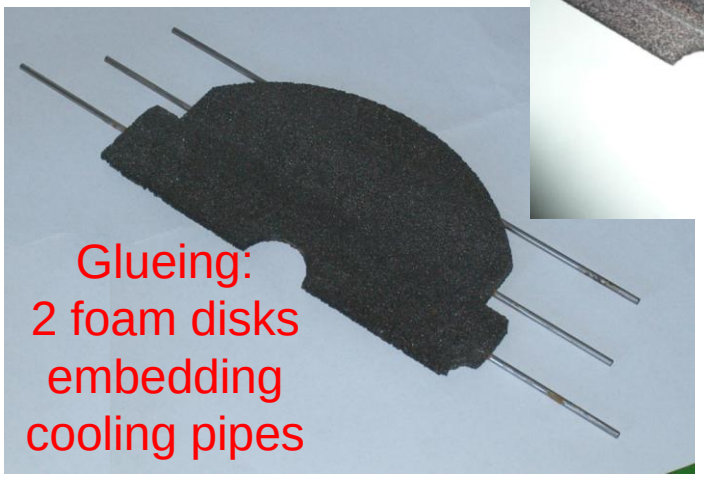

Glueing: 2 foam disks embedding cooling pipes

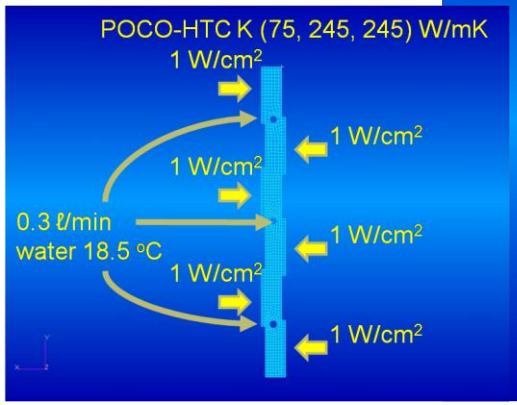

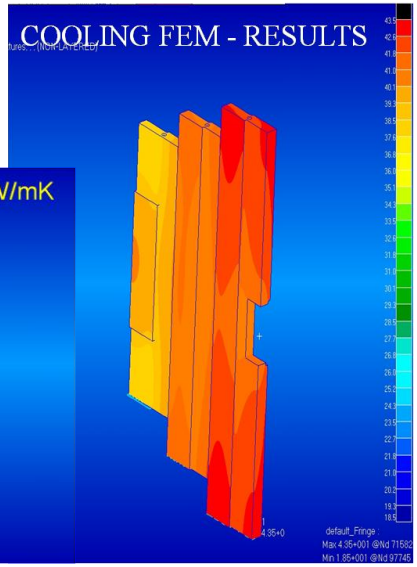

Simulation

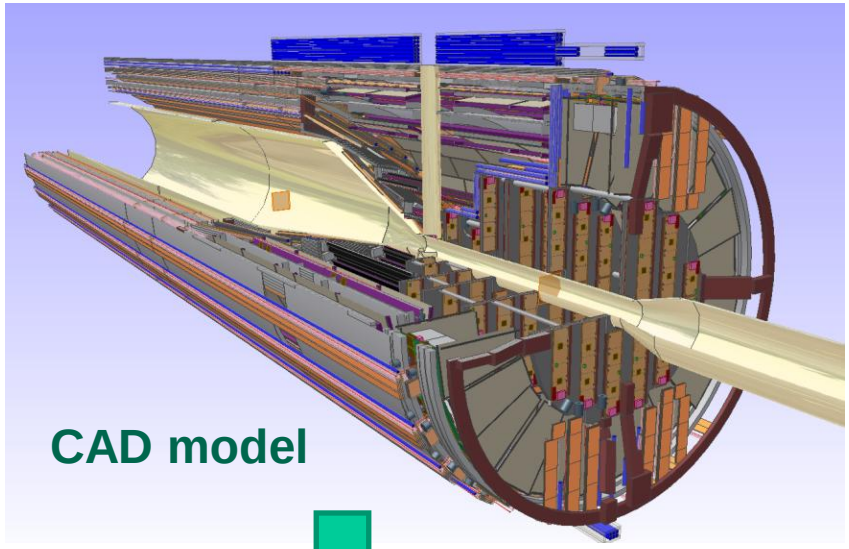

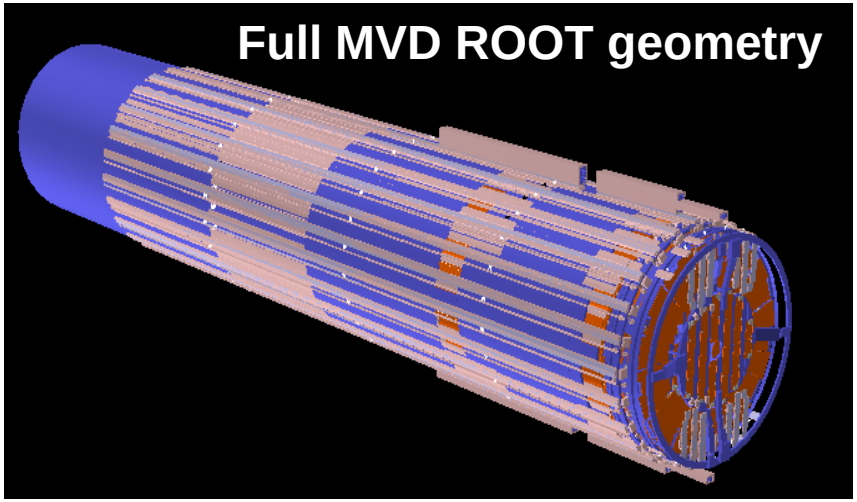

CAD Converter
translates CAD drawings (STEP-files) into ROOT geometries ➔ access to full pandaROOT simulation with realistic detector design

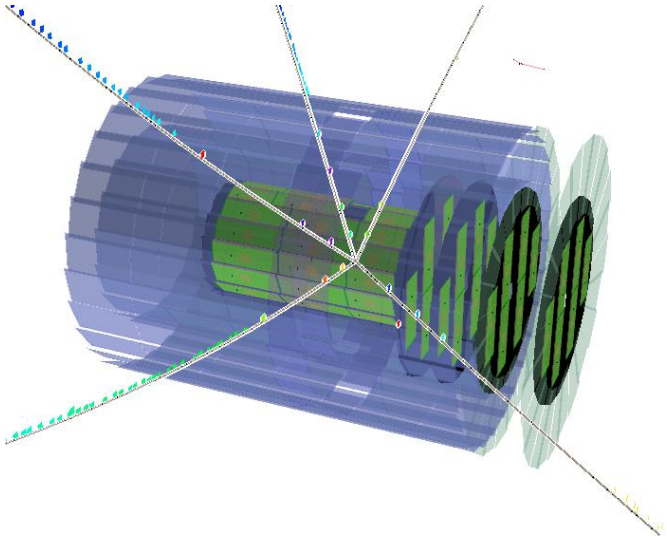

Simulation

- Count rate studies

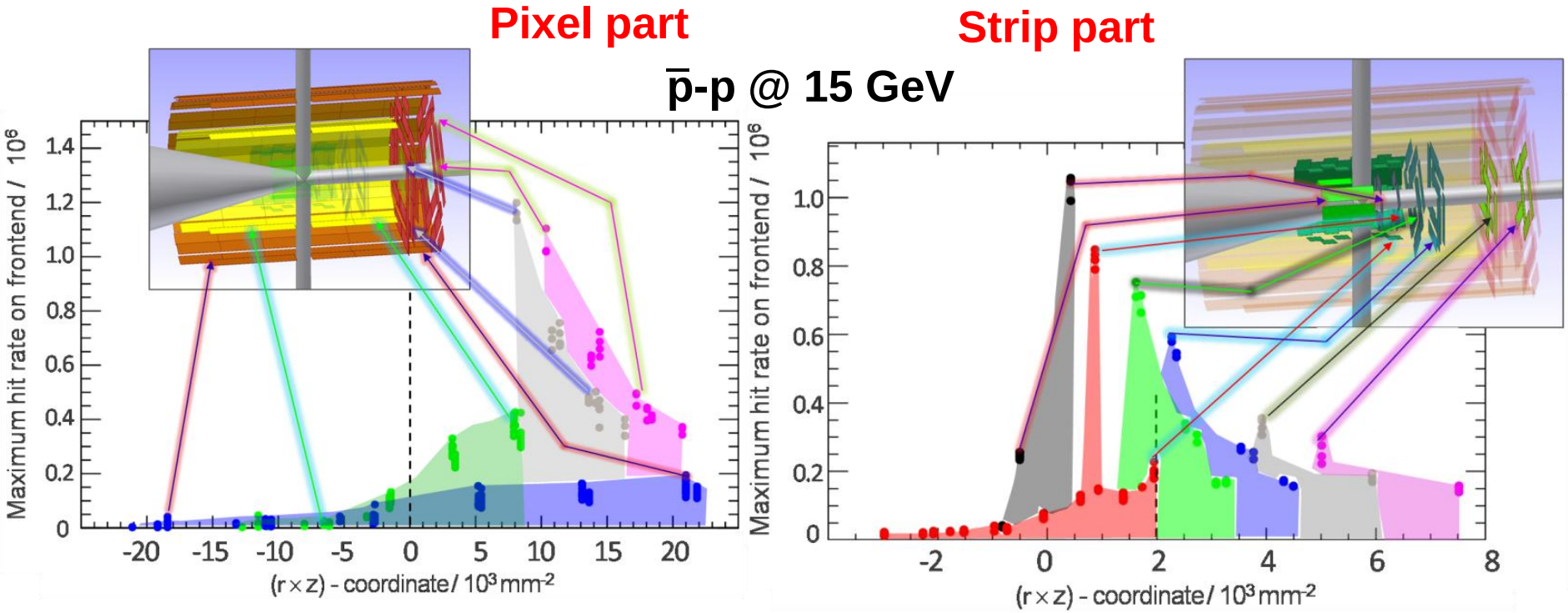

- Maximum count rates / frontend: ~ 10^6 Evts / s
- Anisotropic distribution

Simulation

- Count rate studies

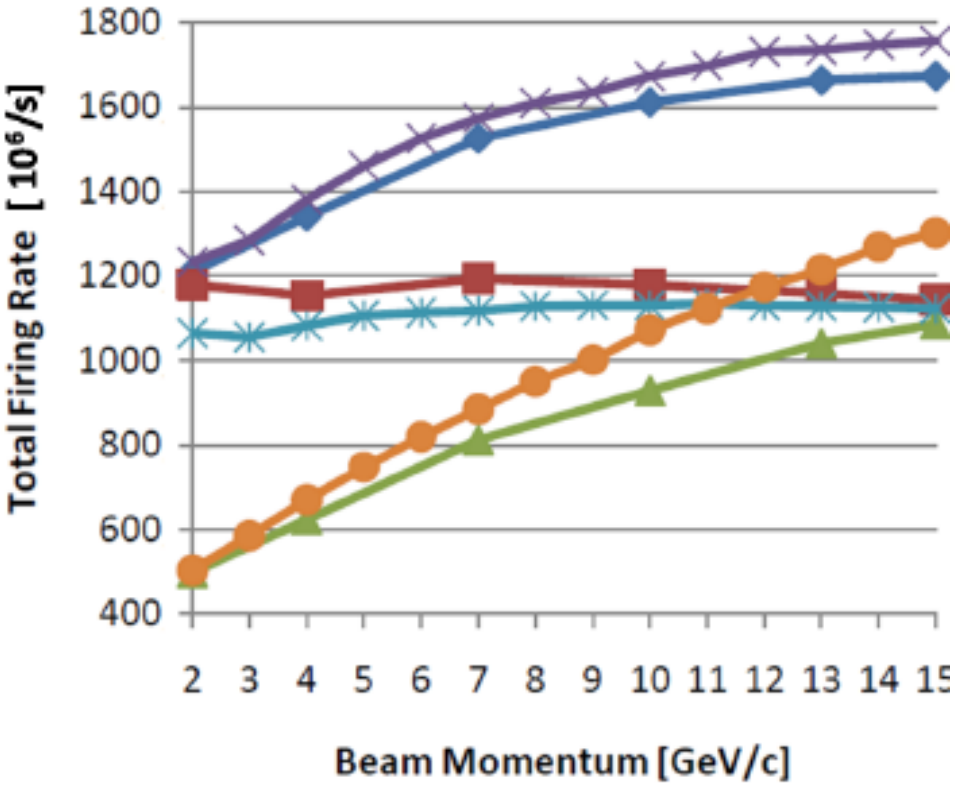

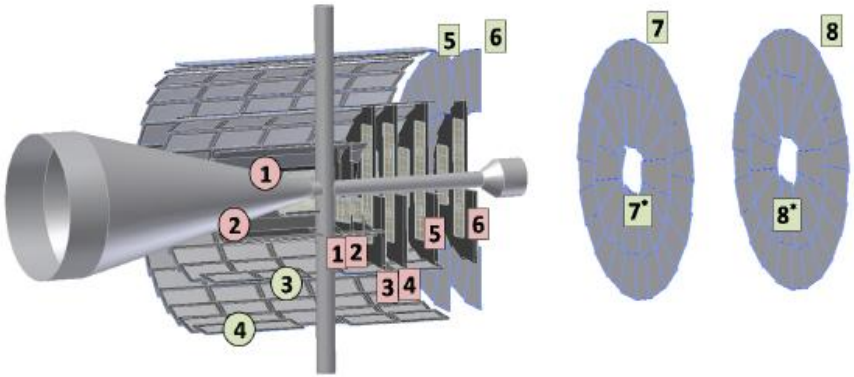

Pixel Part (G3)
Pixel Part (G4)
Strip Part (G3)
Strip Part (G4)
New Strip Part (G3)
New Strip Part (G4)

- Integrated rate over all frontends: ~ 3 Gevts / s

Simulation

- Spatial coverage
  - 2D mapping: Number of MVD points / track

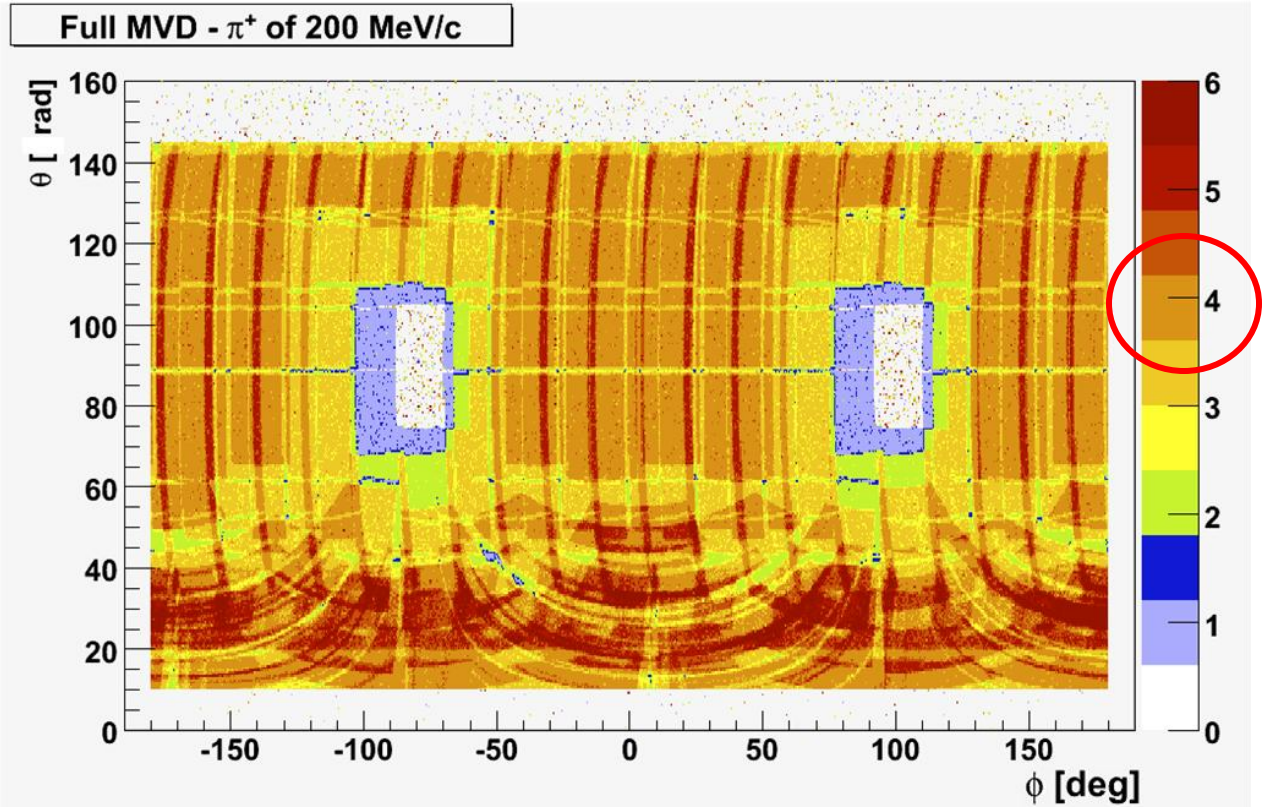

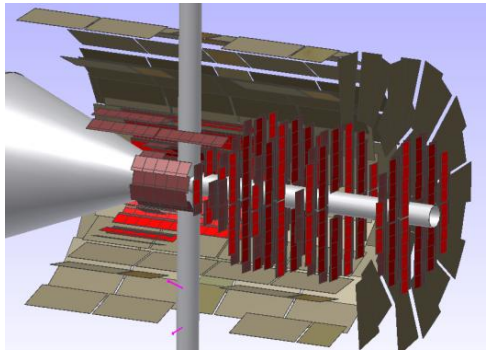

✓ Design optimization for a minimum of 4 trackpoints

Simulation

- Spatial coverage
  - 2D mapping: Number of MVD points / track

π^+ 0.2 GeV/c → 1.5 GeV/c

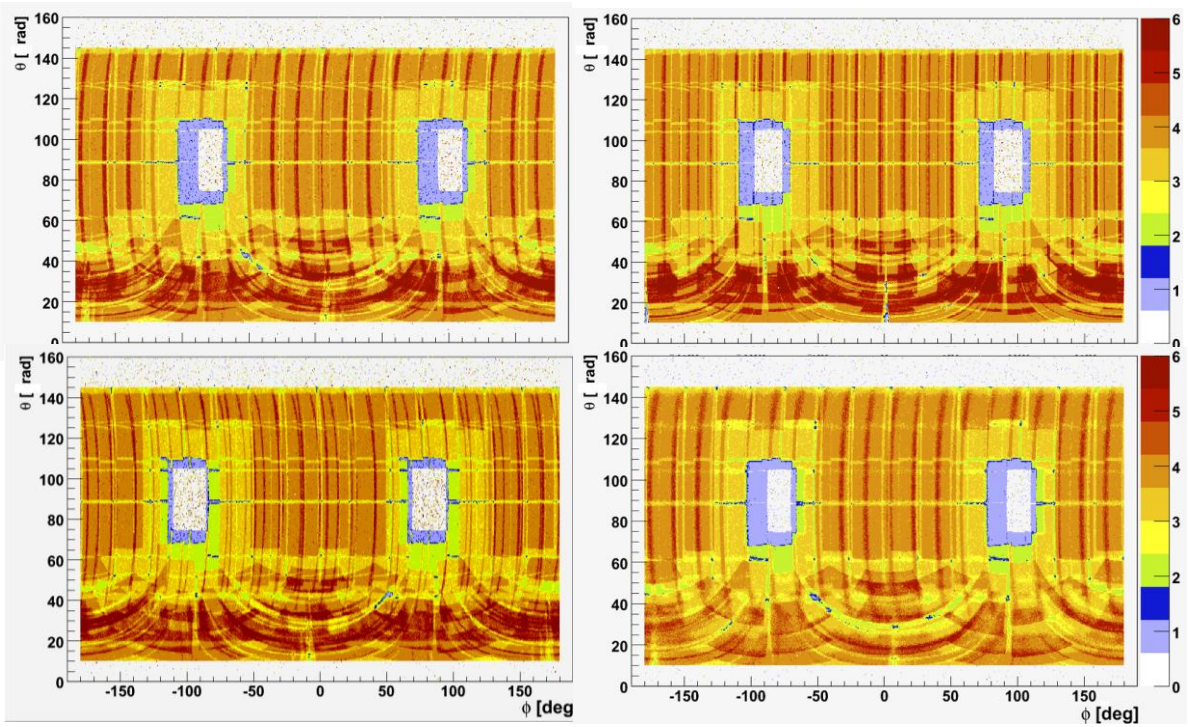

π^- 0.2 GeV/c p 0.2 GeV/c

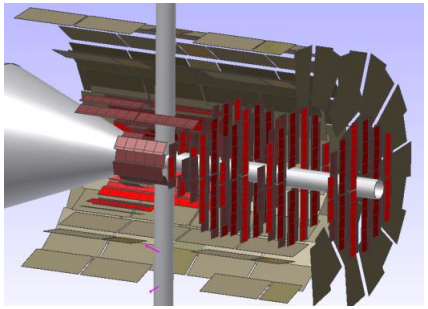

- ✓ No significant effect for particle ↔ antiparticle
- ✓ No significant energy dependence
- ✓ No significant effect for different particle species

→ S. Bianco HK 43.6

Simulation

- Radiation length studies (*Geantino*)
  - 2D mapping of overall material budget

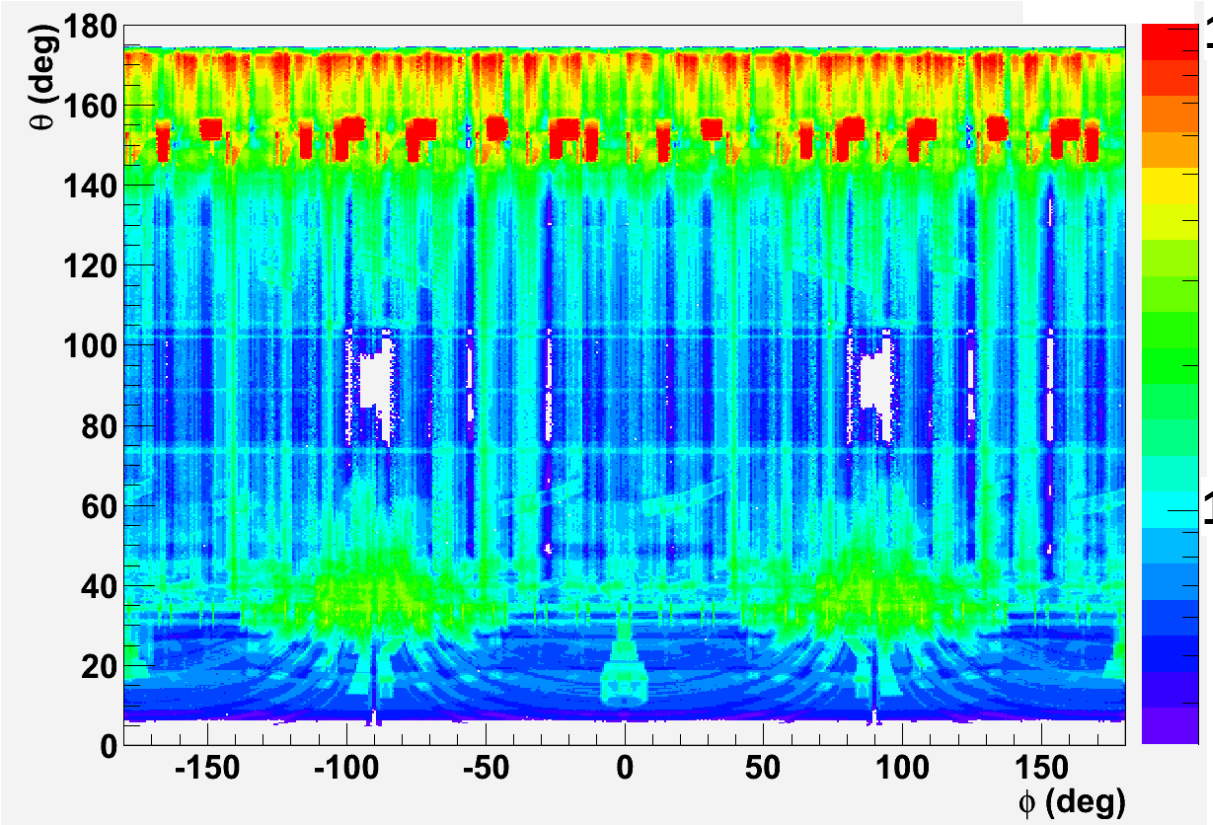

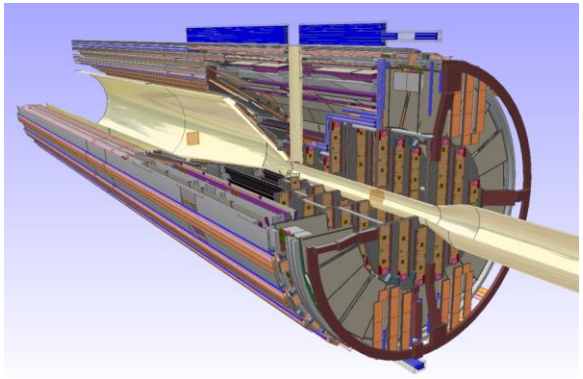

- ✓ More isotropic in barrel part
- ✓ Anisotropic routing of pixel disks
- ✓ Hotspots in upstream region

Simulation

- Radiation length studies (*Geantino*)
  - 2D mapping of main components

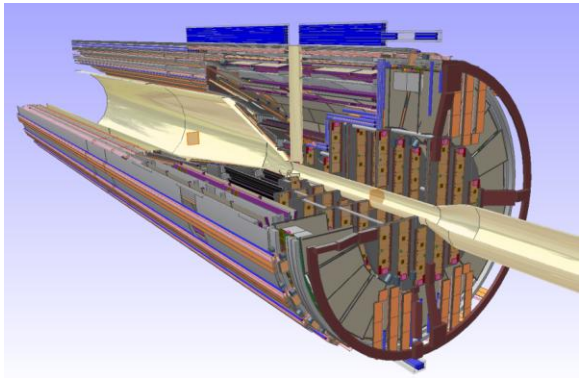

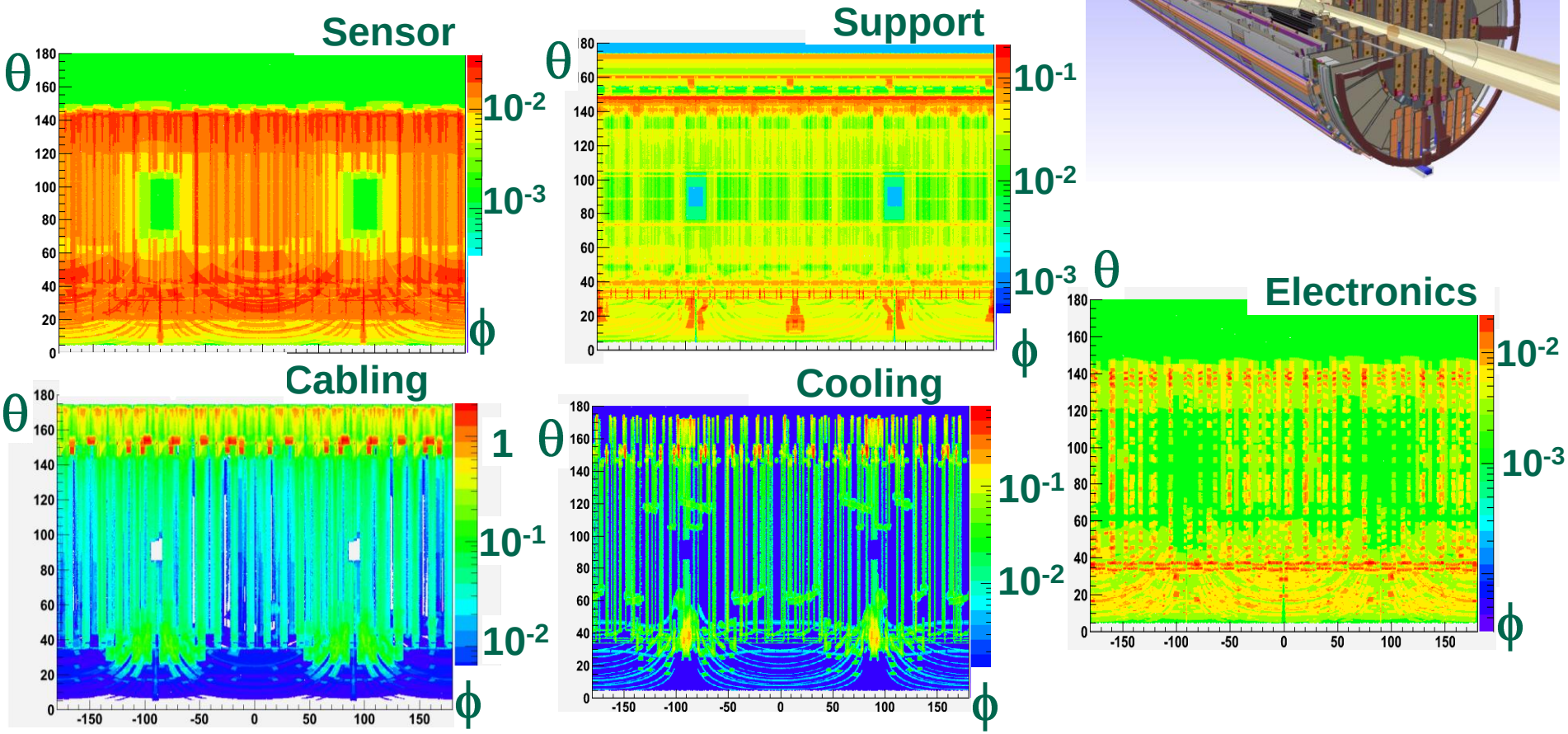

Simulation

- Radiation length studies (*Geantino*)
  - 1D profile scan for polar angle

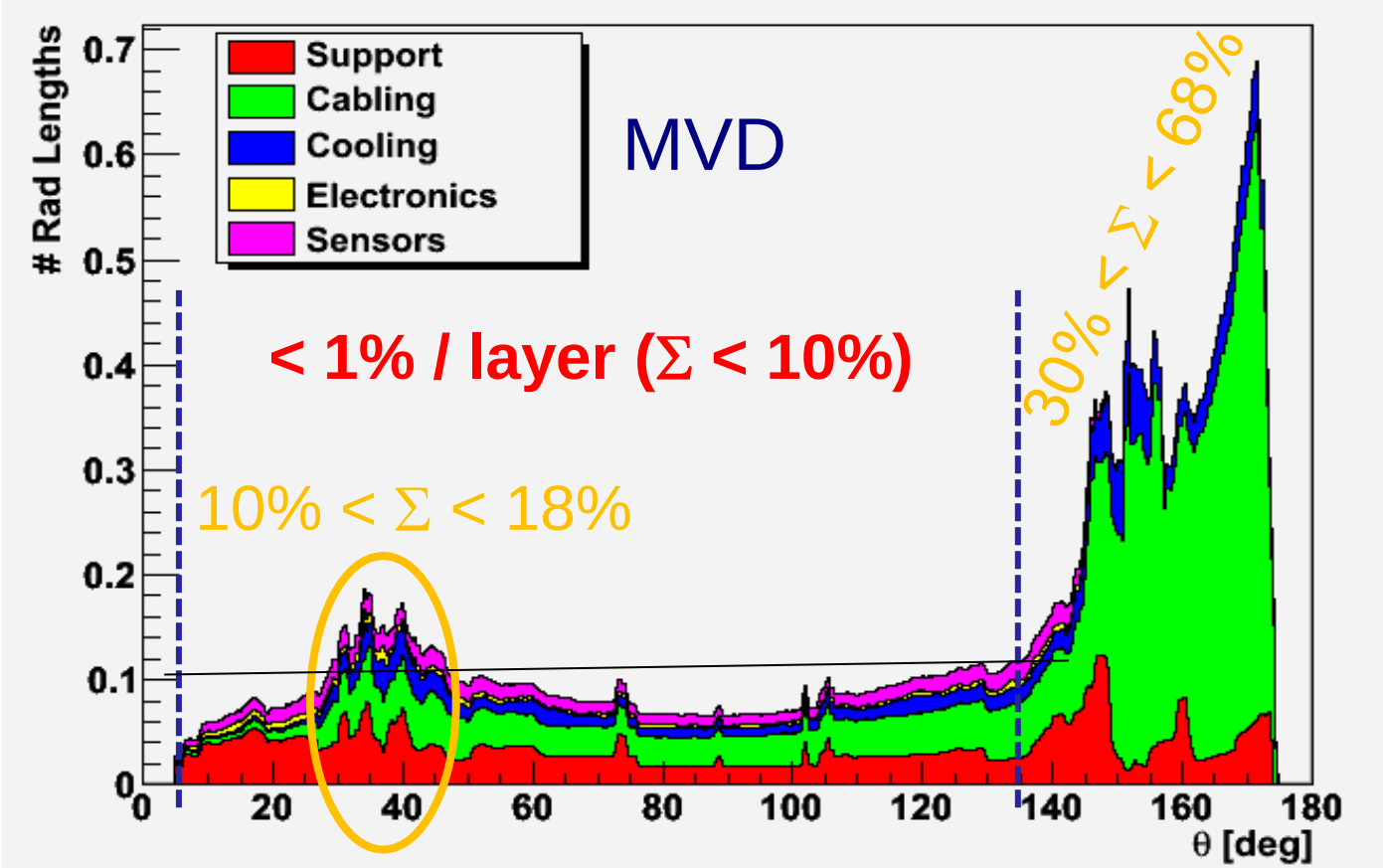

Performance

- Momentum resolution

1 GeV/c pions (0;0;0)

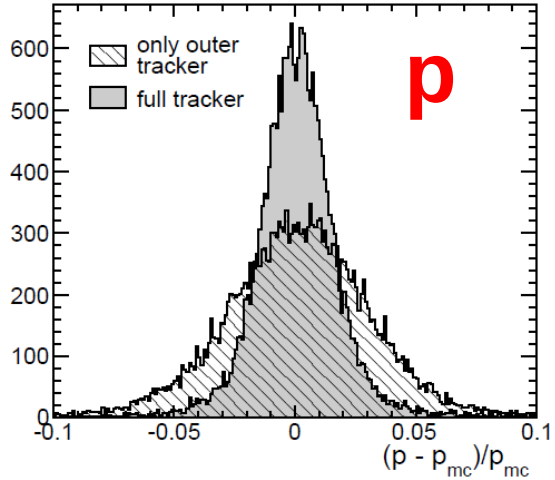

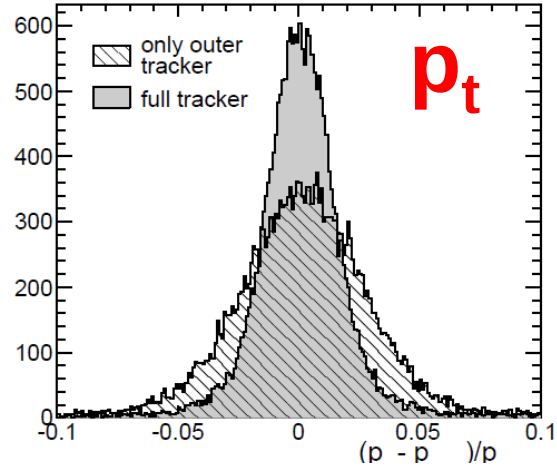

$\sigma(p)$ without MVD = 2.6 %
$\sigma(p)$ with MVD = 1.4 %

$\sigma(p_t)$ without MVD = 2.9 %
$\sigma(p_t)$ with MVD = 1.4 %

→ Improvement by 50%

- Single track resolution

→ No resolution along z without MVD

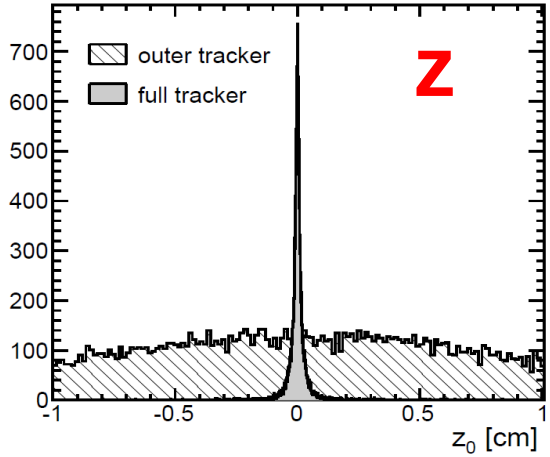

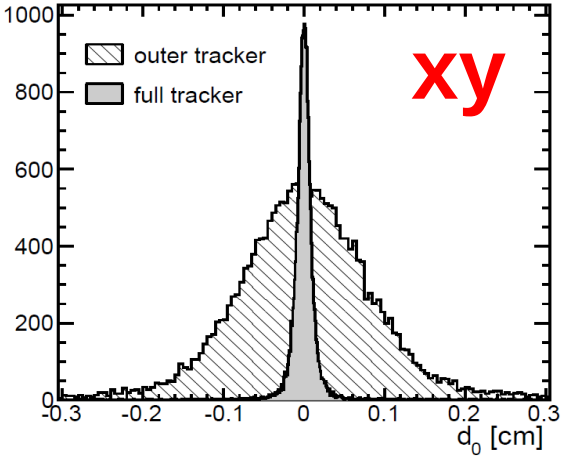

Performance

- Energy loss information
  ... under study
  → D. Pohl HK 21.7

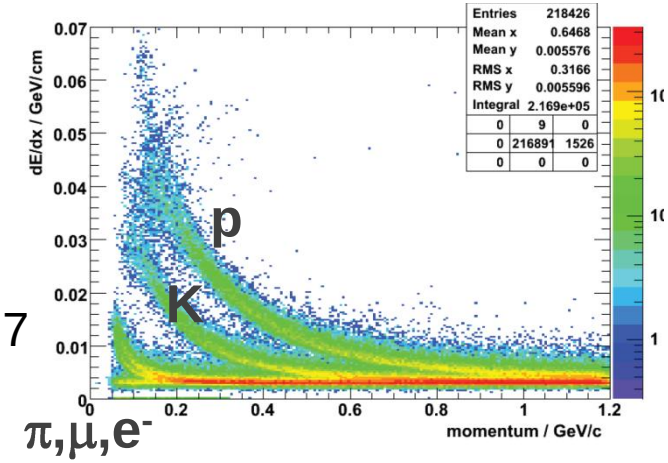

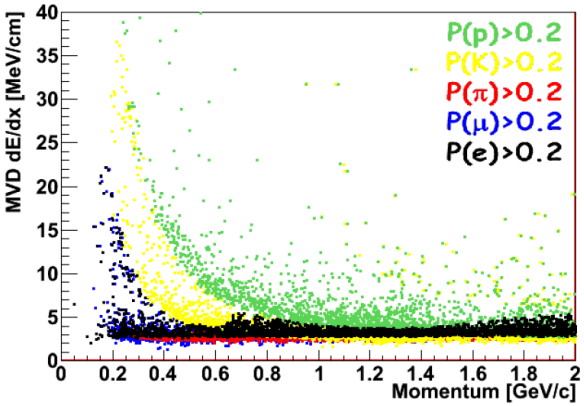

- Primary vertex resolution $\bar{p}p \rightarrow \pi^+\pi^-$ **15 GeV/c**

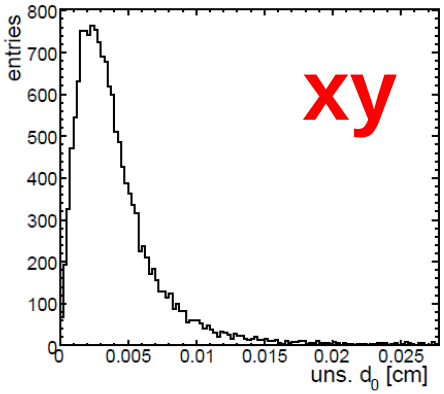

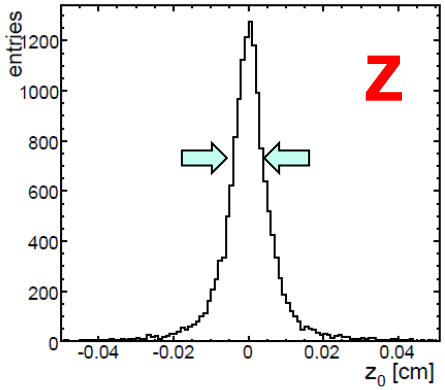

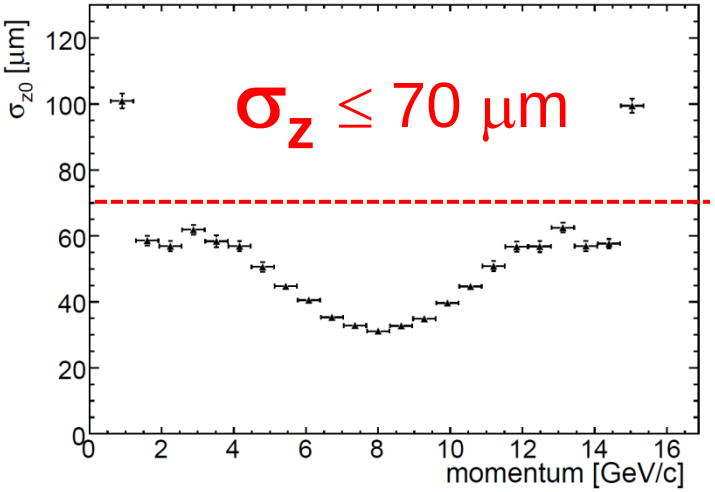

→ R. Jäkel *PhD thesis*

Performance

- Energy loss information
  ... under study
  → D. Pohl HK 21.7

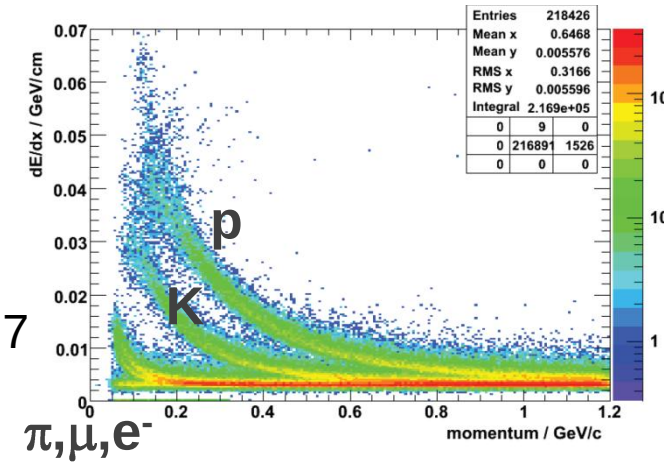

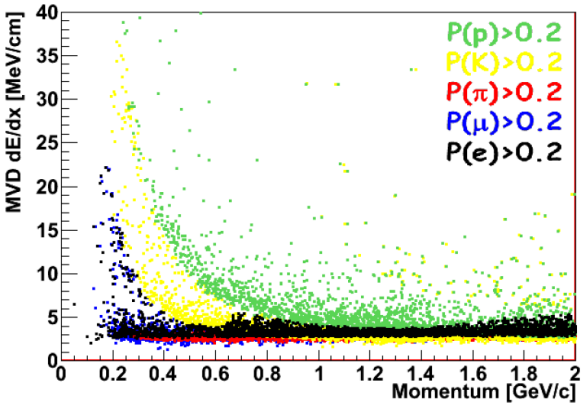

- Vertex resolution $\bar{p}p \longrightarrow D^+D^-$ **(6.57 / 7.50 / 8.50) GeV/c**

momentum GeV/c	vertex resolution [μm] primary $\sigma_{prim,x}$	$\sigma_{prim,y}$	$\sigma_{prim,z}$	secondary $\sigma_{sec,x}$	$\sigma_{sec,y}$	$\sigma_{sec,z}$
6.57	30.7	30.7	493.6	35.4	35.2	77.1
7.50	30.4	30.3	208.5	37.1	36.4	84.0
8.50	30.0	29.0	157.4	36.7	36.2	92.4

→ R. Jäkel *PhD thesis*

→ Primary and secondary vertex resolution:
$\sigma_{x,y} \leq 35\ \mu m$
$\sigma_z \leq 100\ \mu m$

Performance

- Physics analysis $\bar{p}p \rightarrow D^+D^-$
  - Reconstruction: $D^\pm \rightarrow K^\mp\pi^\pm\pi^\pm$

Conservative approach

$$R = \frac{\sigma(\bar{p}p \rightarrow D^+D^-)}{\sigma(\bar{p}p \rightarrow X)} = \frac{2.83nb \cdot (0.092)^2}{60mb} = 4.0 \cdot 10^{-10}$$

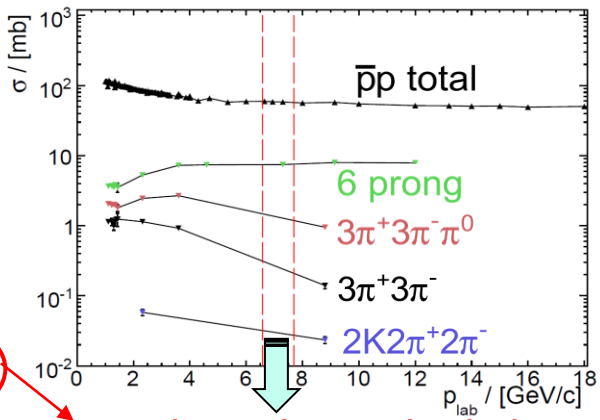

6 orders of magnitude lower

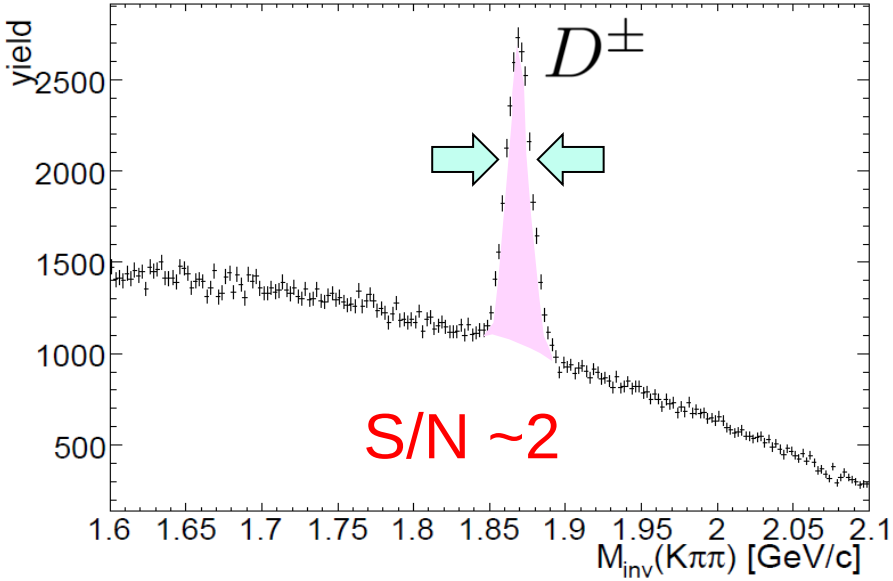

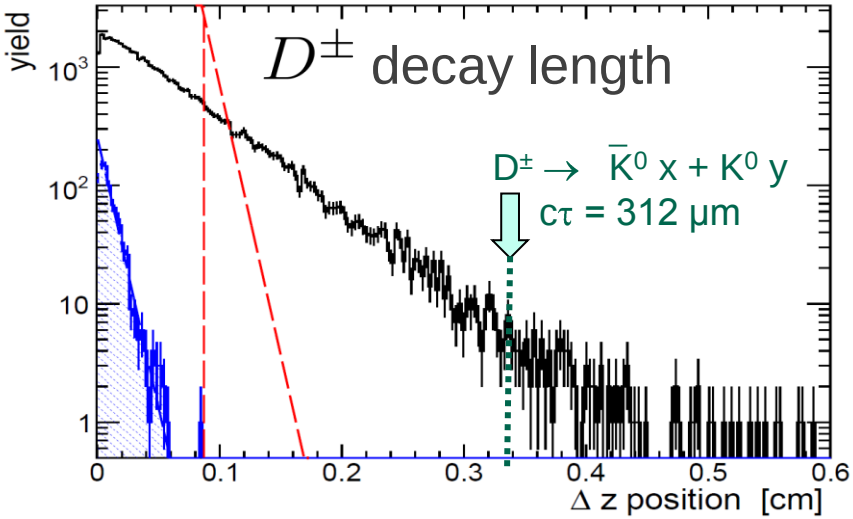

→ arXiv:0903.3905v1

Summary

- Advanced stage of MVD detector development
- Start of prototyping
- Parallel software development to check physics performance
- Still some challenging tasks ahead ...

Institutes and members

K.-Th. Brinkmann, M. Becker, S. Bianco,
R. Jäkel, R. Kliemt, K. Koop, R. Schnell,
T. Würschig, H.-G. Zaunick

(INFN-Torino)

D. Calvo, P. De Remigis, B. Giraudo, S. Coli,
T. Kugathasan, G. Mazza, A. Rivetti,
R. Wheadon, L. Zotti

T. Stockmanns, L. Atar, D. Grunwald,
H. Kleines, D. Pohl, M. Mertens, J. Ritman

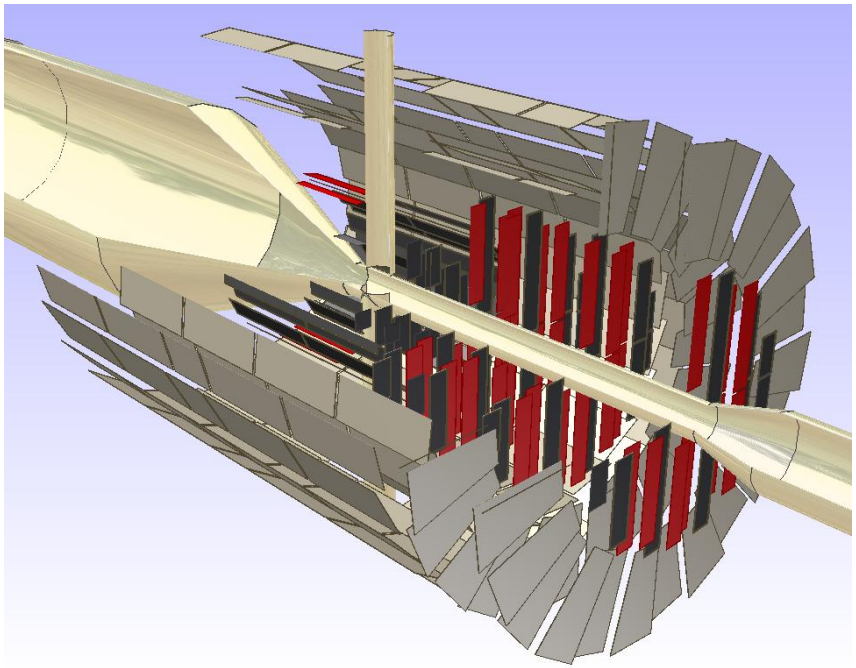

MVD: Active detector volumes only

MVD: Detailed CAD model