Mitglied der Helmholtz-Gemeinschaft

The PANDA Micro-Vertex-Detector

Group report / DPG EuNPC 2009

4. Mai 2009 | Tobias Stockmanns for the PANDA Collaboration | HK 40.1

Content

- Introduction to the PANDA detector at HESR
- The Micro-Vertex-Detector of PANDA
  - Requirements
  - Setup of the MVD
  - Technical Developments
  - Simulation Results
- Summary / Outlook

Main Physics Program

PANDA – Anti**P**roton **An**nihilations at **Da**rmstadt

- qq potential in the charmonium system
  - precision measurements of cc-states (not only $J^{PC} = 1^{--}$)
  - cc above DD-threshold ➔ measurement of D-mesons
- Search for Hybrids qqg and/or Glueballs gg
- Spectroscopy of new charm states
- Charmed and multi-strange baryon spectroscopy
- Electromagnetic processes ($pp \rightarrow e^+e^-$, $pp \rightarrow \gamma\gamma$, Drell-Yan)
- Properties of single and double hypernuclei
- Properties of hadrons in nuclear matter

➔*P. Gianotti – HK 24.1*

High Energy Storage Ring

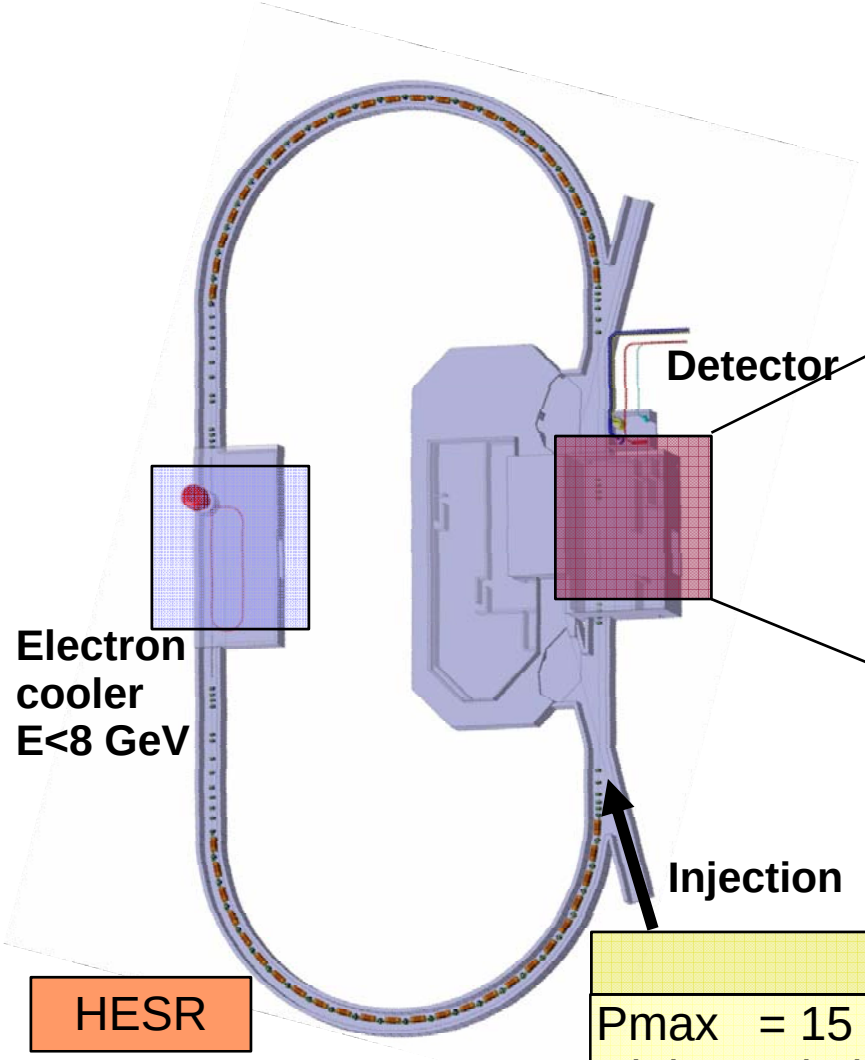

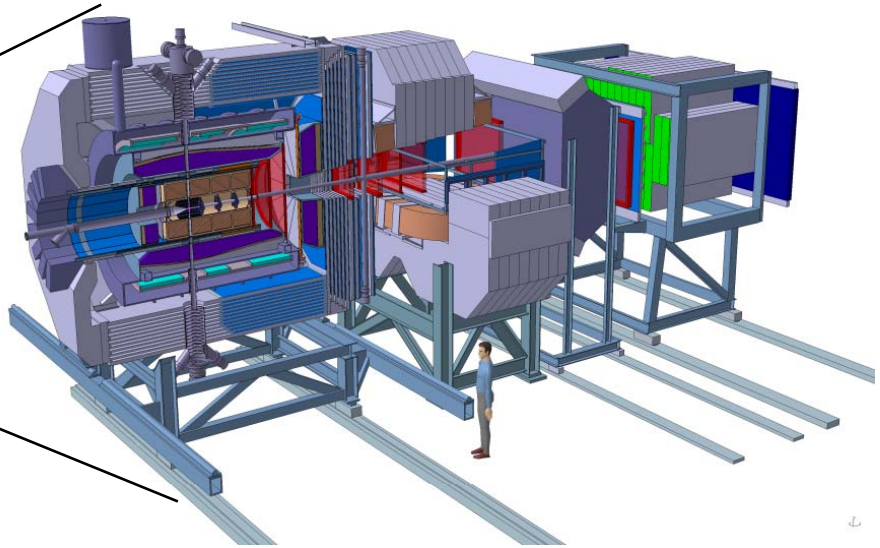

Cooling: electron/stochastic		
Pmax = 15 GeV/c		
High resolution:	L = 10^{31} cm^{-2} s^{-1}	$\delta p/p < 4\times10^{-5}$
High luminosity:	L = $2\cdot10^{32}$ cm^{-2} s^{-1}	$\delta p/p < 10^{-4}$

PANDA Spectrometer

Detector requirements:

• 4π coverage	(partial-wave-analysis)
• high rates	($2 \cdot 10^7$ annihilations/s)
• good PID	(γ, e, μ, π, K, p)
• momentum resolution	(~1%)
• vertexing for D, K^0_S, Λ	($c\tau$ = 123 μm for D^0, p/m $\approx$2)
• efficient trigger	(e, μ, K, D, Λ)
• no hardware trigger	(raw data rate ~TB/s)

PANDA Spectrometer

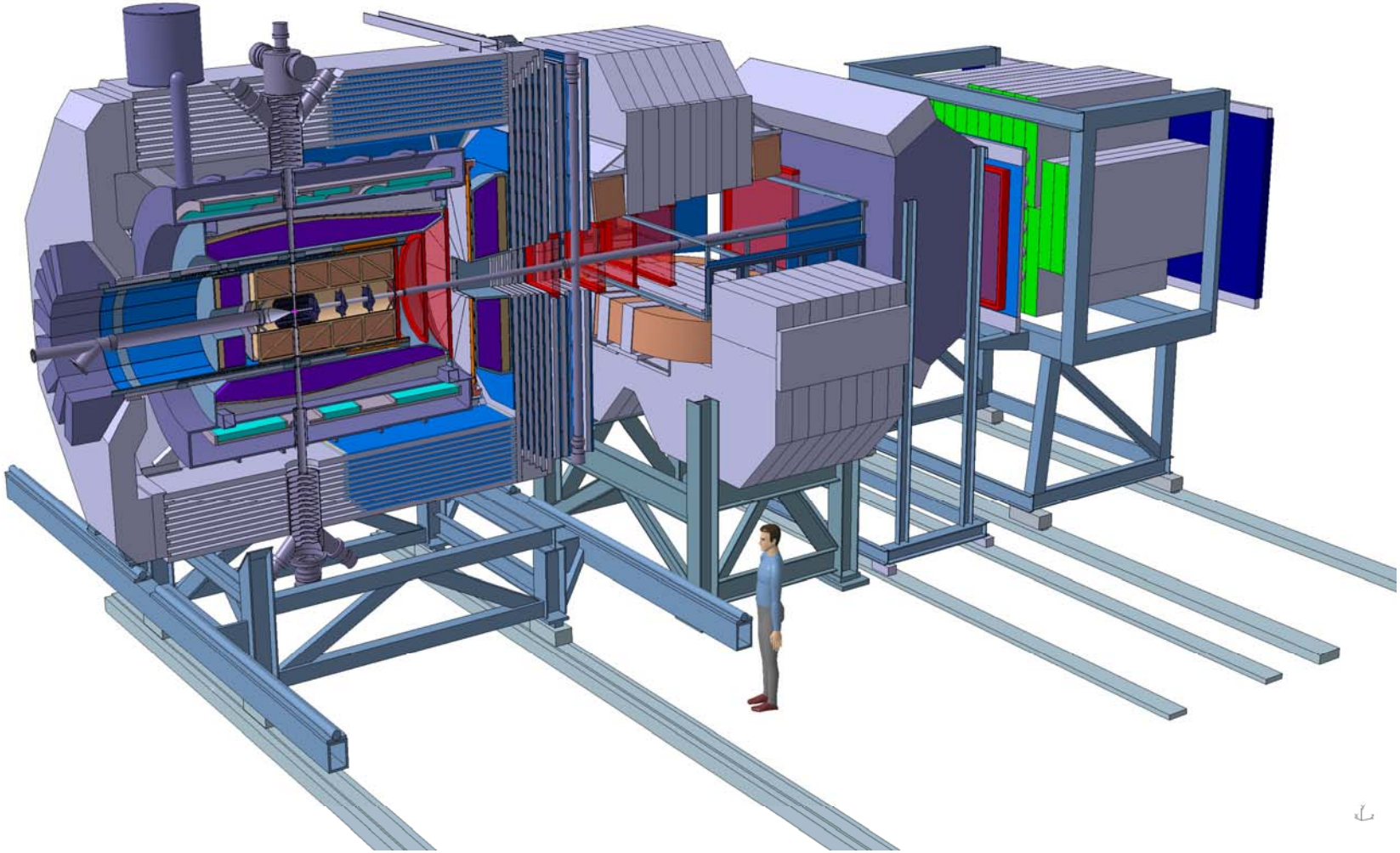

PANDA Spectrometer

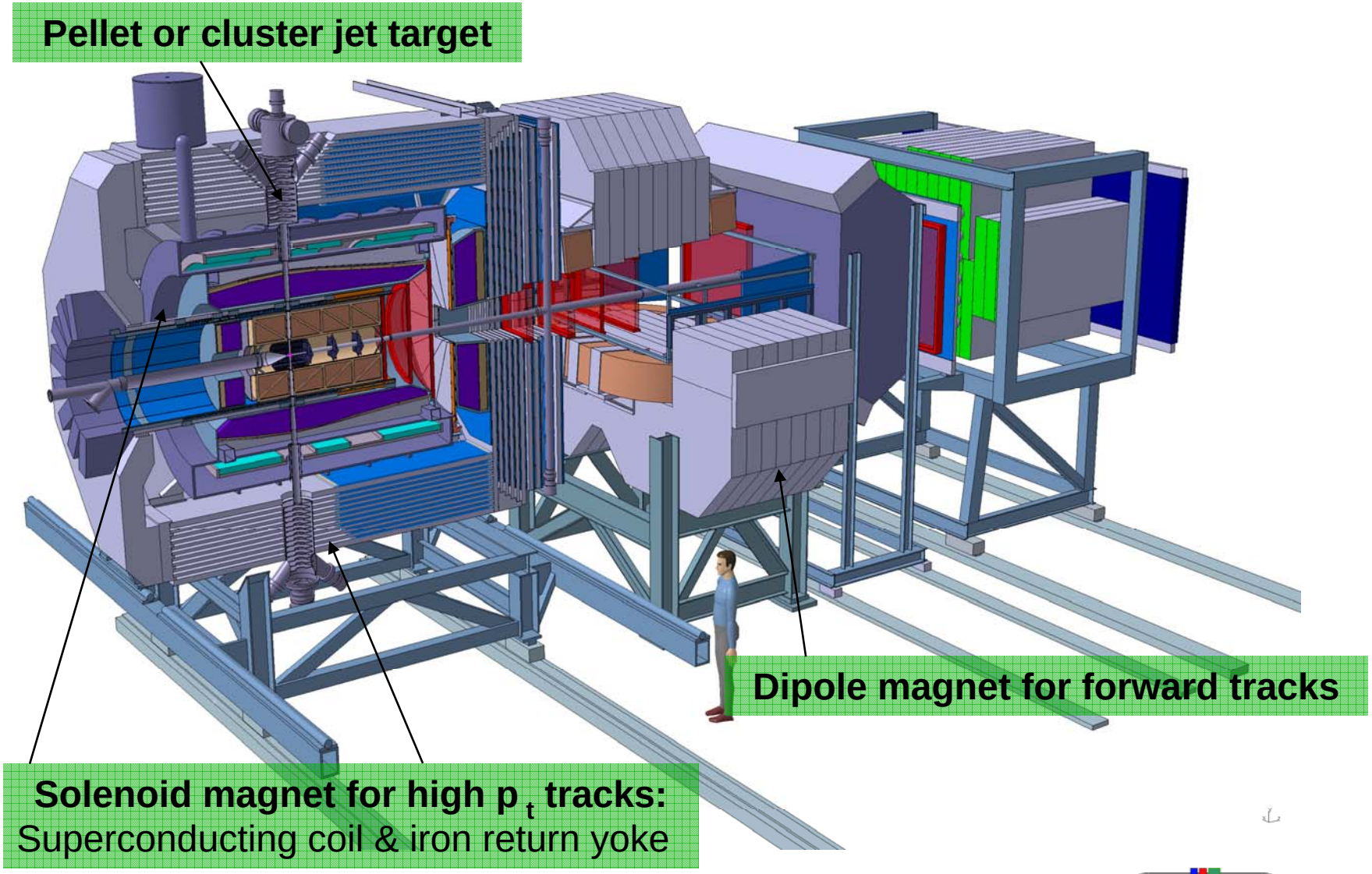

PANDA Spectrometer

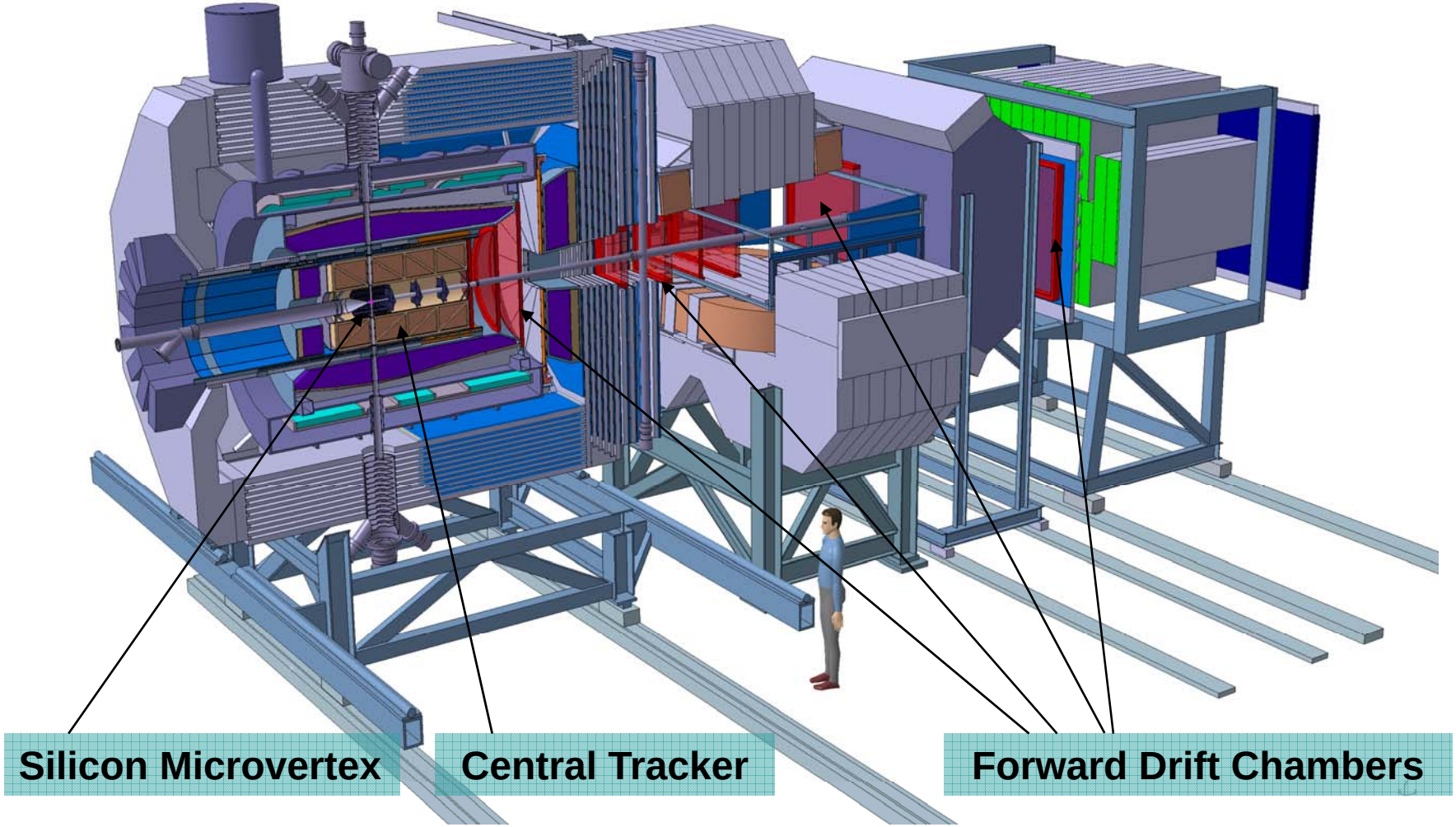

PANDA Spectrometer

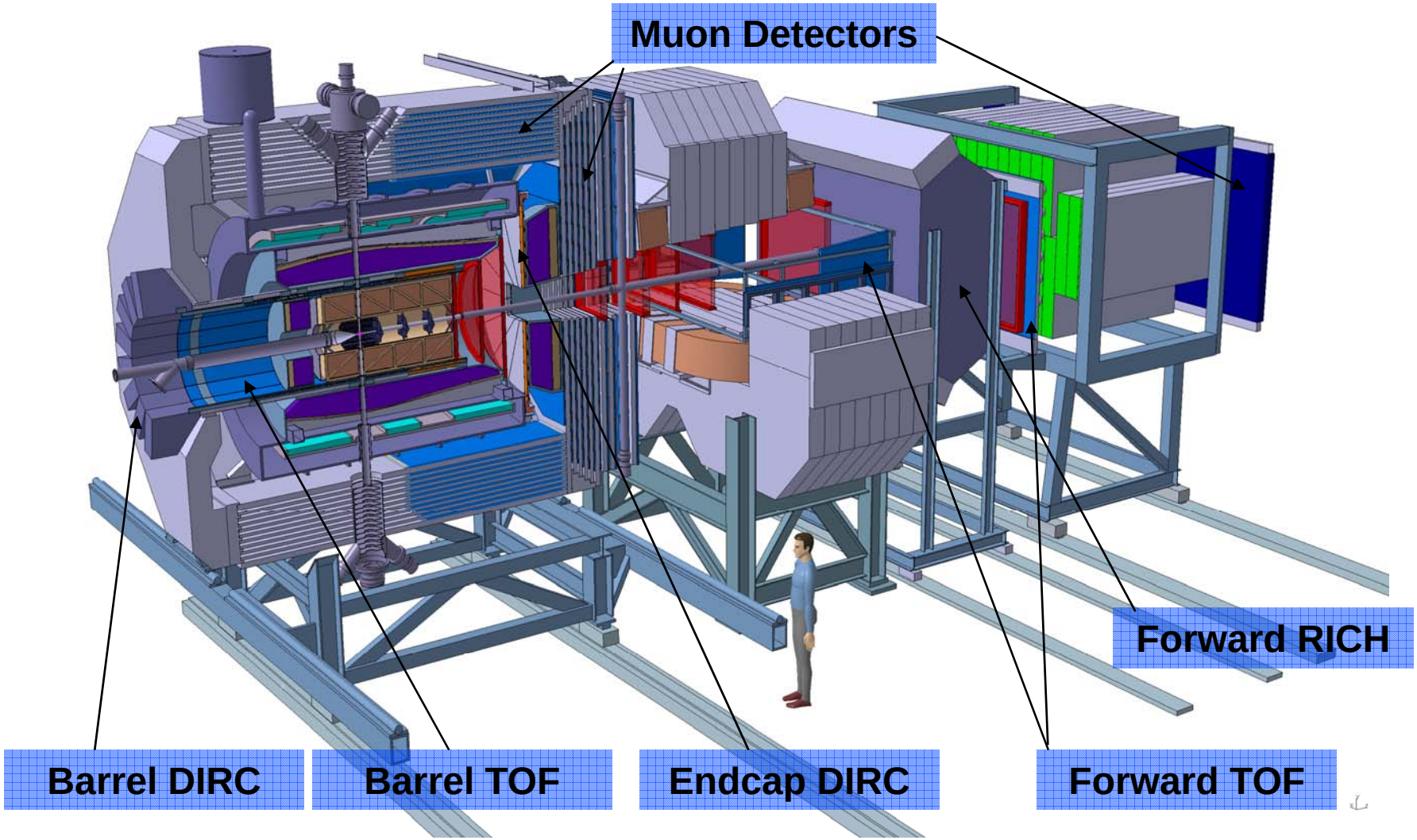

PANDA Spectrometer

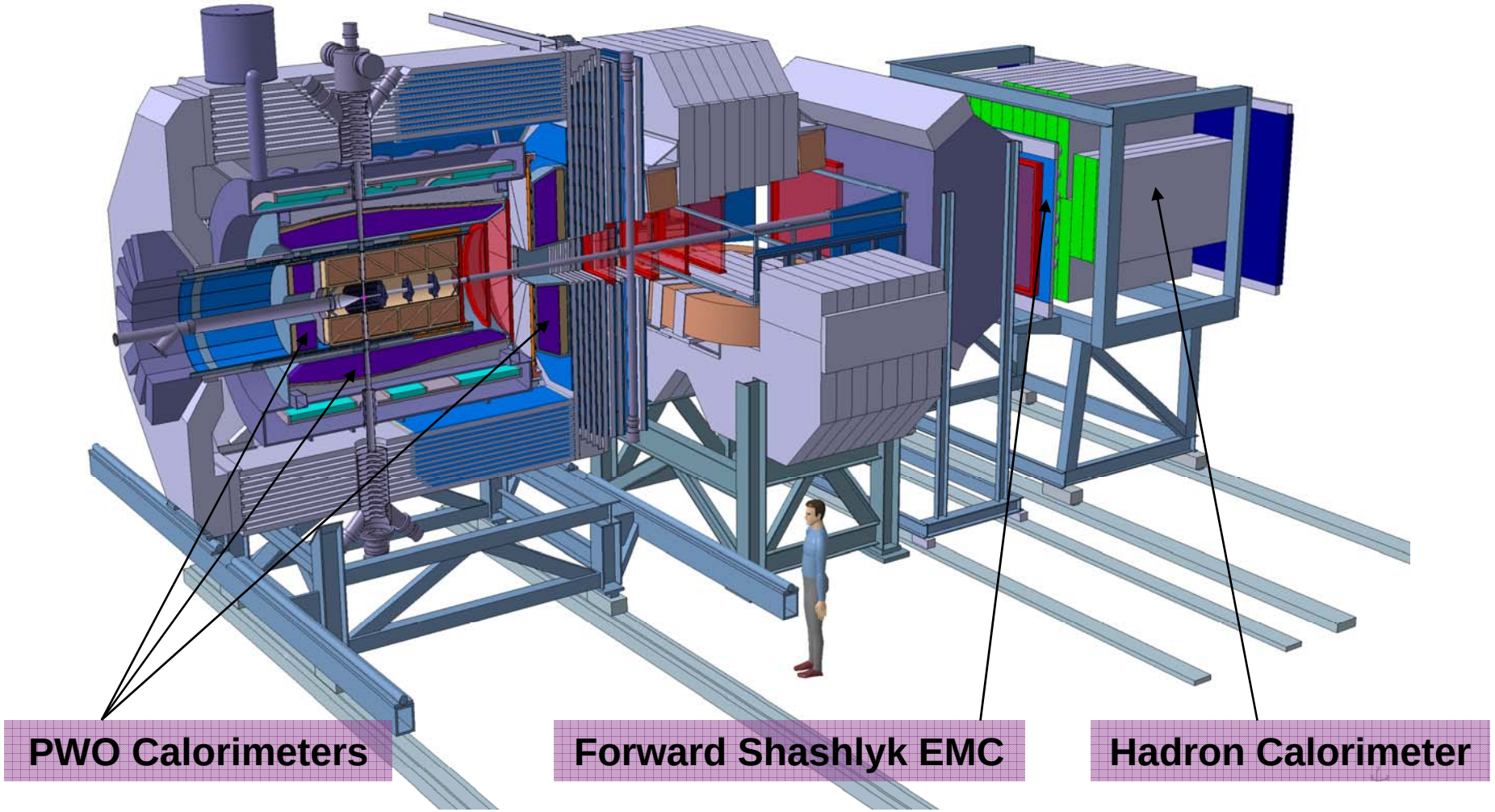

Micro-Vertex-Detector

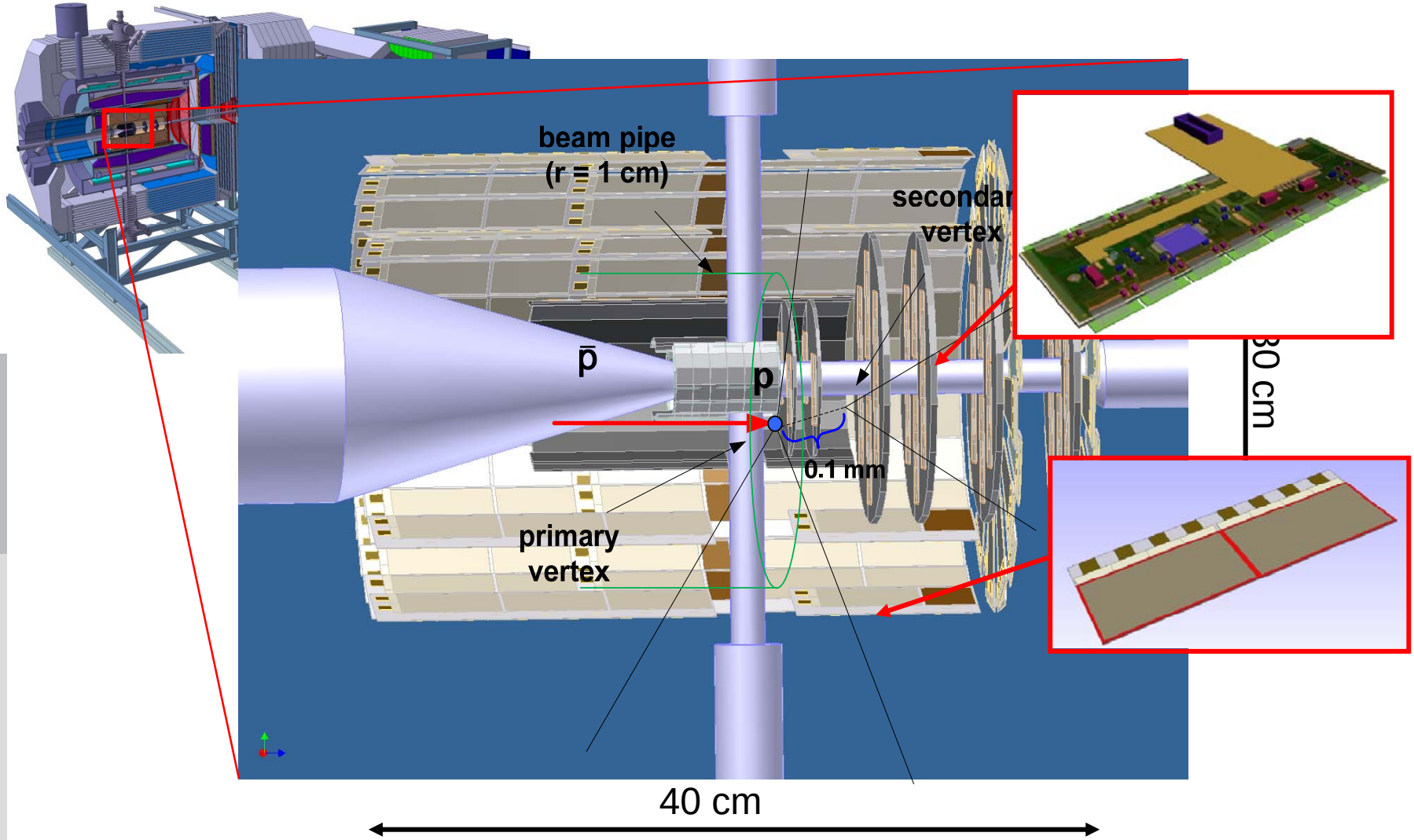

Requirements MVD

- Good spatial resolution in r-phi ➔ momentum measurement of soft pions from D* decays
- Good spatial resolution specially in z ➔ vertexing, D-tagging

D-Meson decays

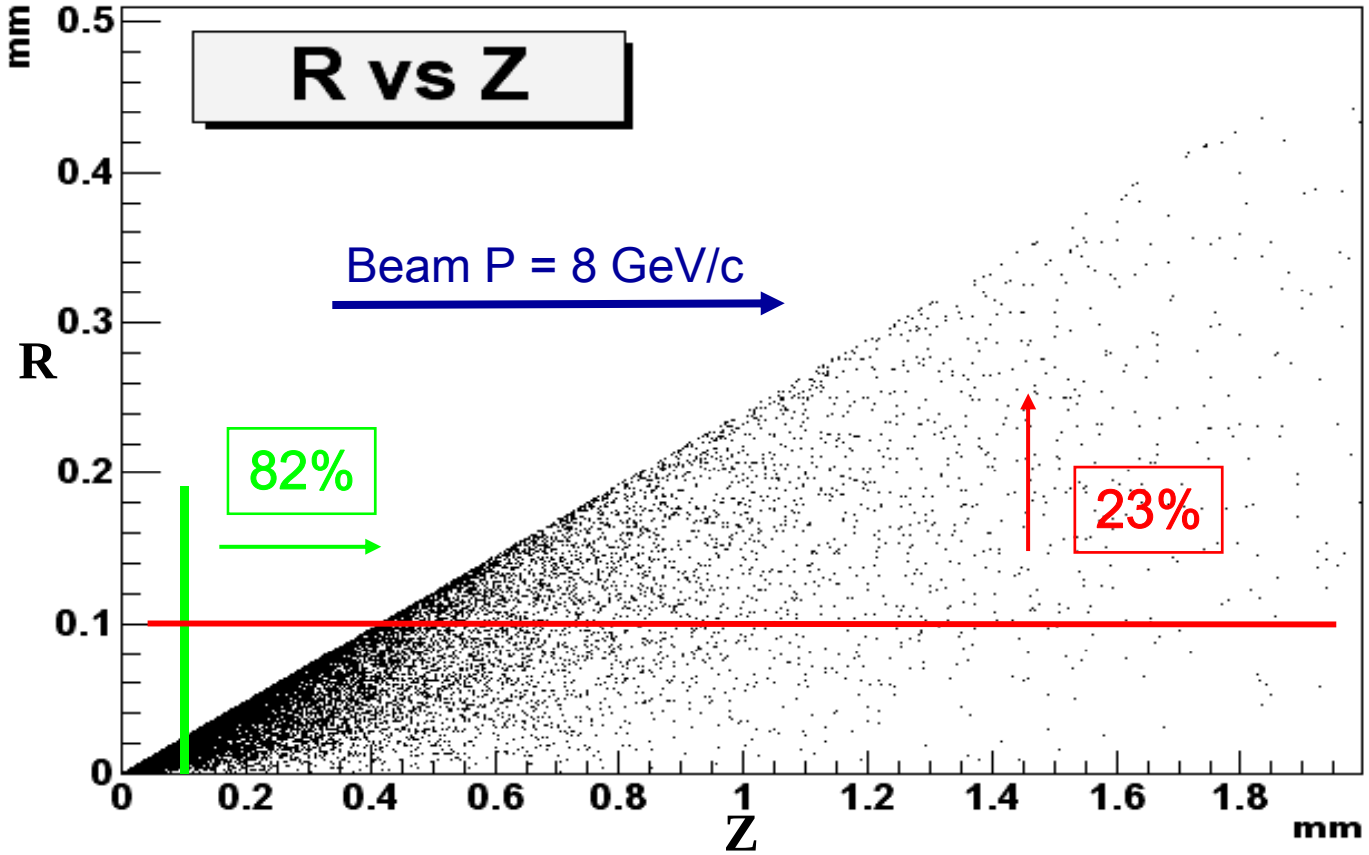

Distribution of secondary vertex from D-meson decays for a beam kinetic energy 8 GeV/c.

➔ Need to optimize resolution in the Z direction!

Requirements MVD

- Good spatial resolution in r-phi ➔ momentum measurement of soft pions from D* decays
- Good spatial resolution specially in z ➔ vertexing, D-tagging
- Good time resolution (O(20 ns)) ➔ 'DC'-beam ($2 \cdot 10^7$ events/s)
- Amplitude measurement ➔ improvement of resolution dE/dx to improve particle ID

Particle Identification with MVD

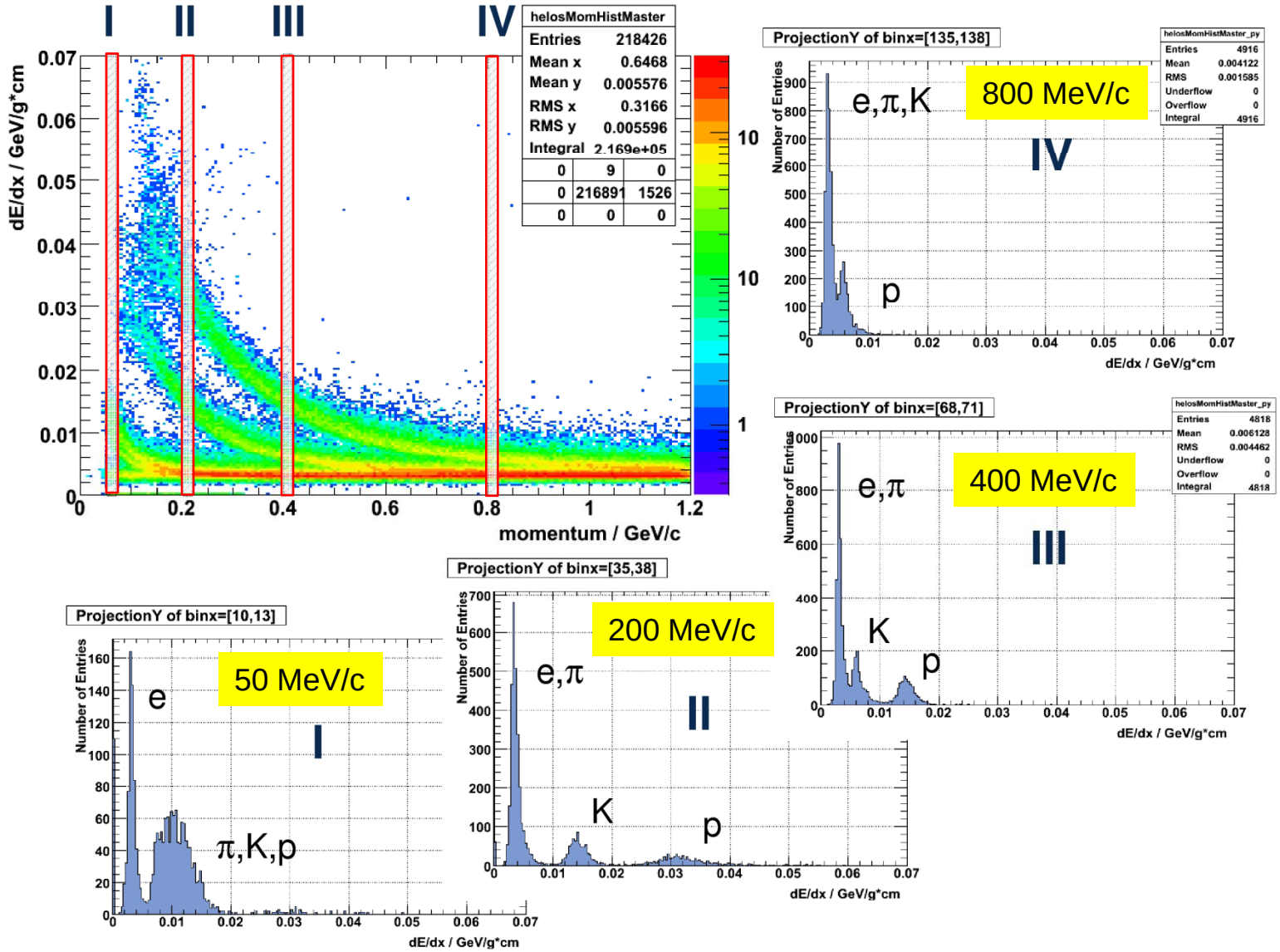

Requirements MVD

- Good spatial resolution in r-phi ➔ momentum measurement of soft pions from D* decays
- Good spatial resolution specially in z ➔ vertexing, D-tagging
- Good time resolution (O(20 ns)) ➔ 'DC'-beam ($2 \cdot 10^7$ events/s)
- Amplitude measurement ➔ improvement of resolution dE/dx to improve particle ID
- Modest radiation hardness ($O(10^{14}\ n_{eq} / cm^2)$) ➔ depends on target material

Radiation Damage Pixel Barrel

pp @ 5 GeV/c for one year operation

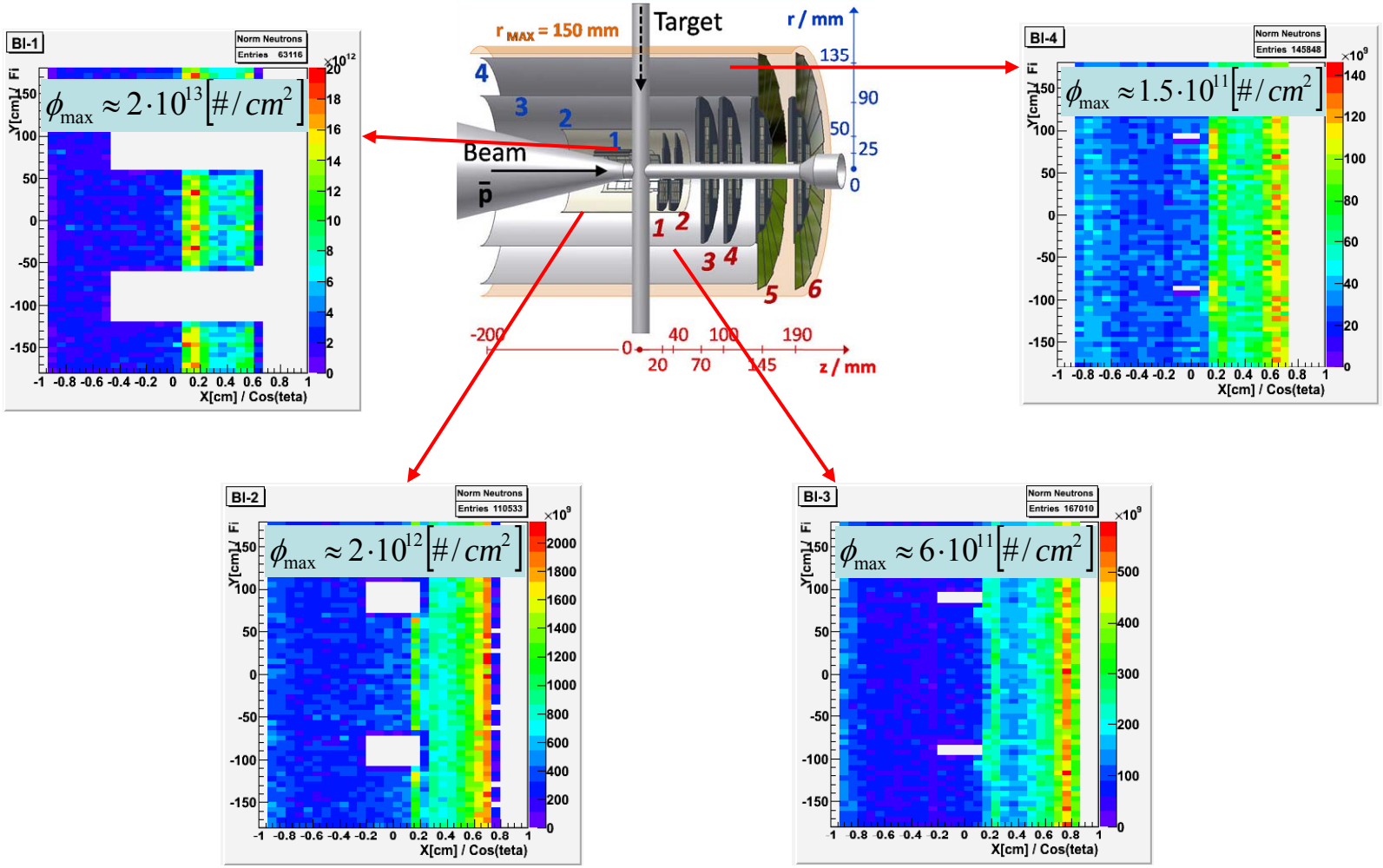

Radiation Damage Disks

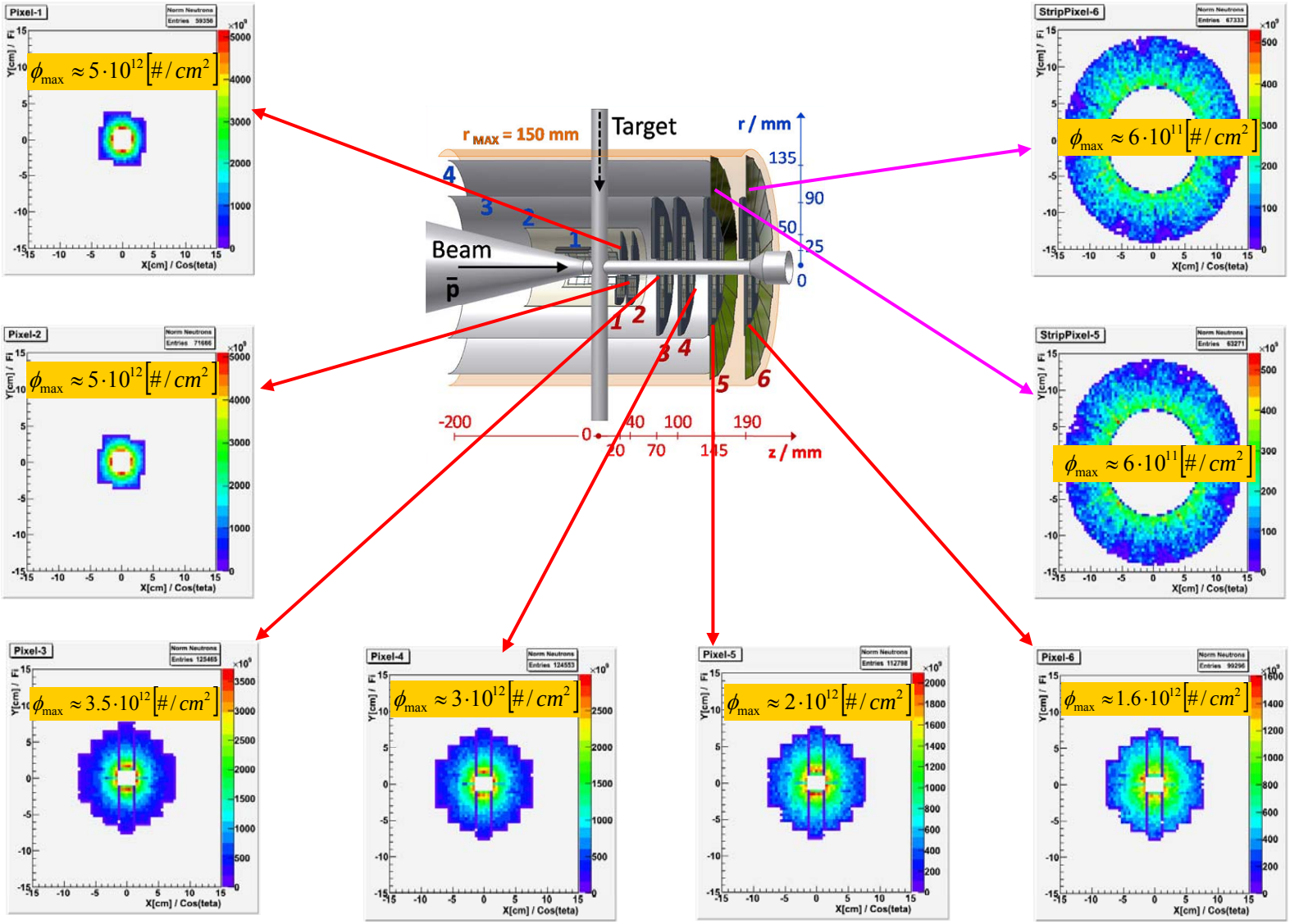

Requirements MVD

- Good spatial resolution in r-phi ➔ momentum measurement of soft pions from D* decays
- Good spatial resolution specially in z ➔ vertexing, D-tagging
- Good time resolution (O(20 ns)) ➔ 'DC'-beam ($2 \cdot 10^7$ events/s)
- Amplitude measurement ➔ improvement of resolution dE/dx to improve particle ID
- Modest radiation hardness ($O(10^{14}\ n_{eq} / cm^2)$) ➔ depends on target material
- Triggerless readout ➔ no first level hardware trigger

Simulated maximum data rate

- Simulated maximum data rate for 4 GeV/c p on Cu:
  - Pixel module (12 cm^2): $32 \cdot 10^6\ s^{-1}$ ➔ 1.3 Gbit/s
  - Front-End chip (1 cm^2): $5.5 \cdot 10^6\ s^{-1}$ ➔ 220 Mbit/s (assuming 40 bit/hit)

Maximum hit rate of FE on module

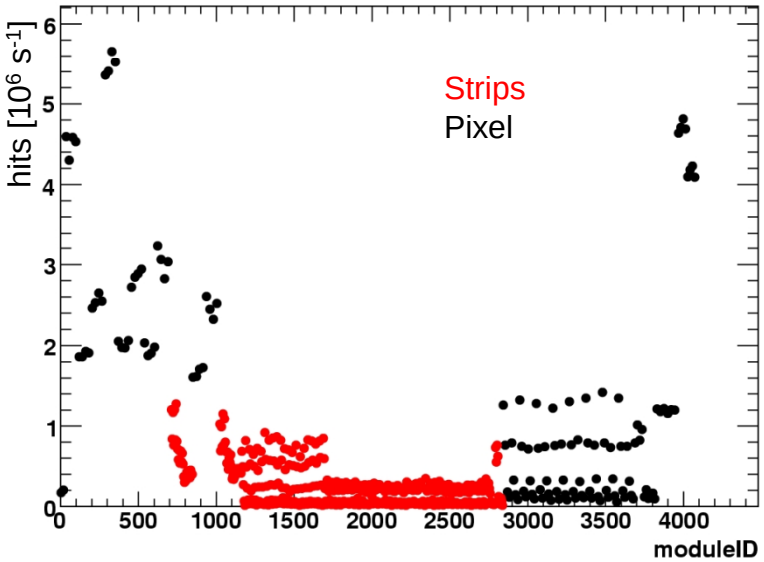

Hit distribution on module with highest rates

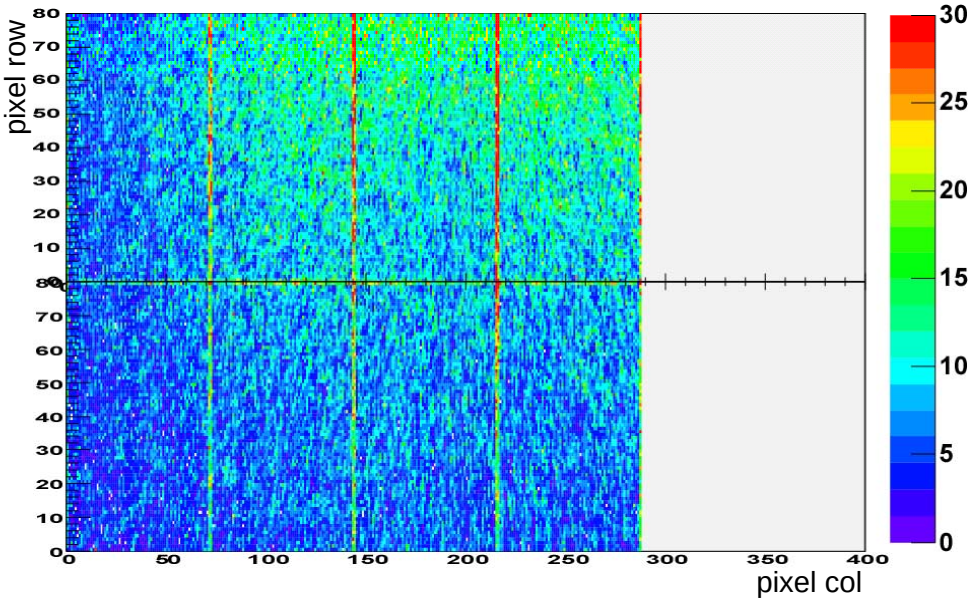

Requirements MVD

- Good spatial resolution in r-phi ➔ momentum measurement of soft pions from D* decays
- Good spatial resolution specially in z ➔ vertexing, D-tagging
- Good time resolution (O(20 ns)) ➔ 'DC'-beam (2 10^7 events/s)
- Amplitude measurement ➔ improvement of resolution dE/dx to improve particle ID
- Modest radiation hardness (O(10^{14} n_{eq} / cm^2)) ➔ depends on target material
- Triggerless readout ➔ no first level hardware trigger
- Low material budget ➔ low momentum particles energy resolution calorimeter

Momentum distribution and multiple scattering

pp @ 8 GeV/c

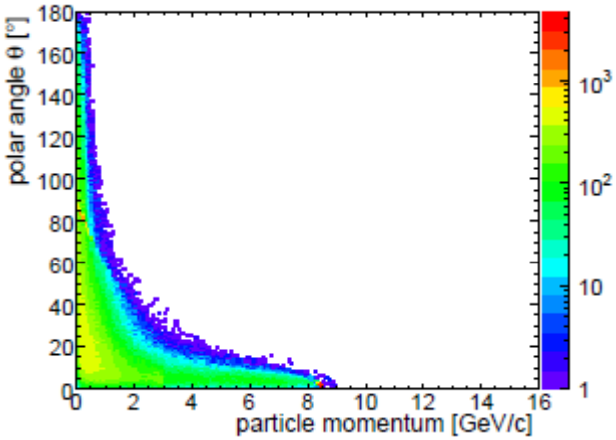

pAu @ 8 GeV/c

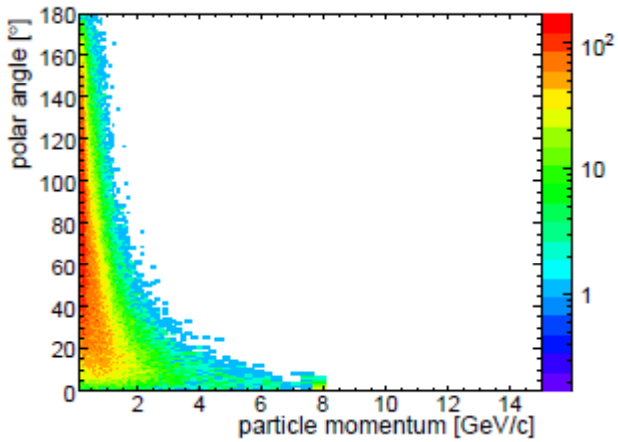

mean deflection angle

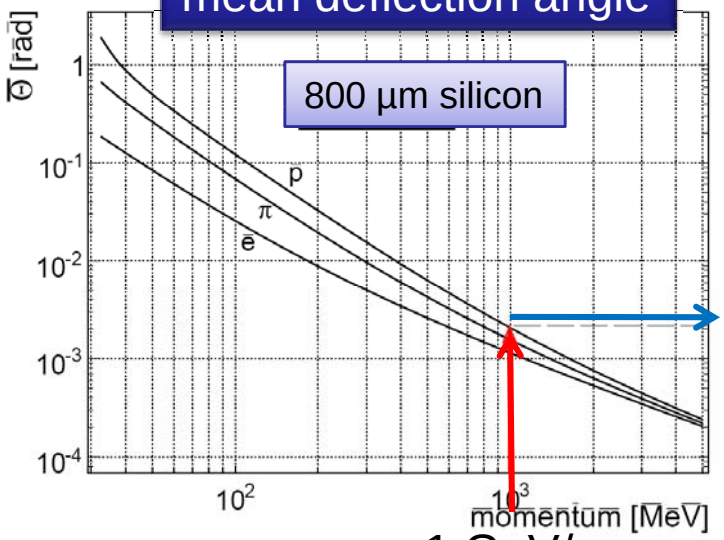

1 GeV/c

2 mrad ➔ 20 µm error / cm path

Multiple scattering dominates resolution for low momentum particles

TECHNICAL DEVELOPMENTS

Hybrid Pixel Module

sensor:
- epi-Silicon
  - 50, 75, 100 µm thick epi-Layer on CZ substrate
  - thinned down to 75 – 150 µm
- alt. oxygen enriched silicon
  - thinned down to 150 – 200 µm

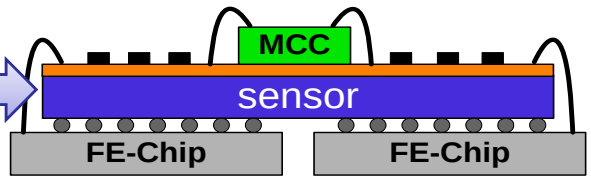

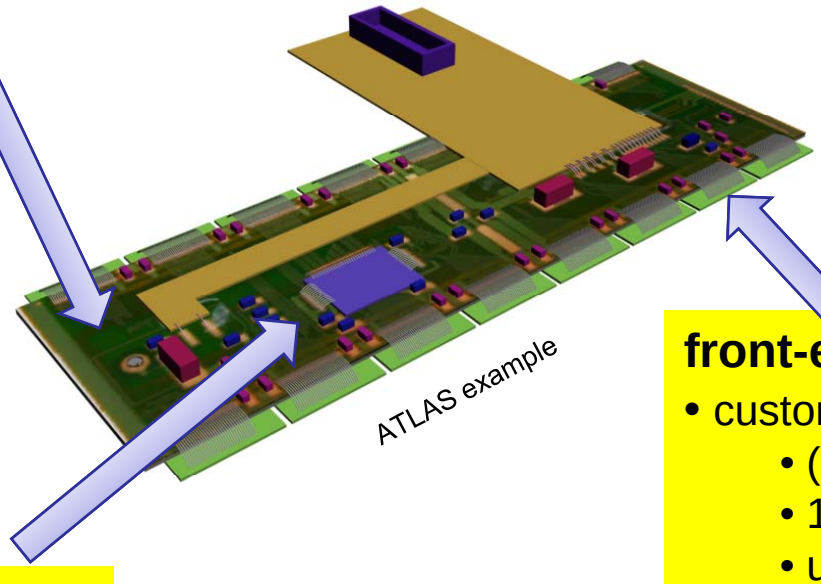

front-end chip:
- custom development (ToPix)
  - $(100\ \mu m)^2$ pixels
  - 100 x 100 pixel matrix
  - untriggered readout
  - 130 nm IBM process

readout:
- Module Controller Chip?

➔ *D. Calvo – HK40.2*

ToPix Development

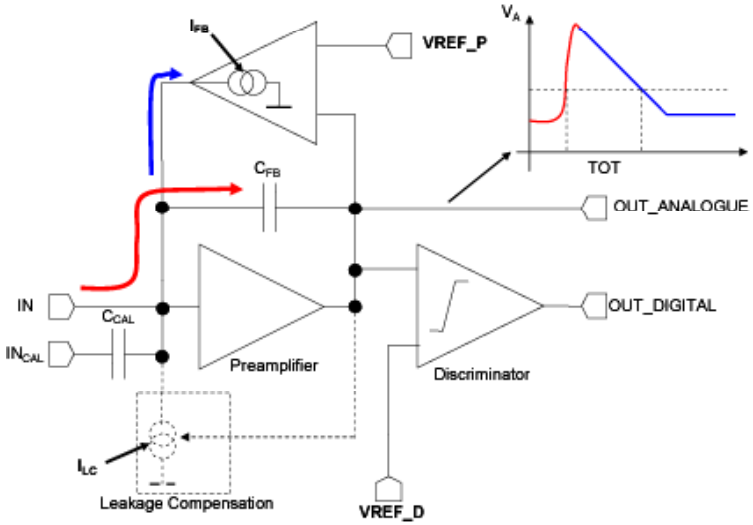

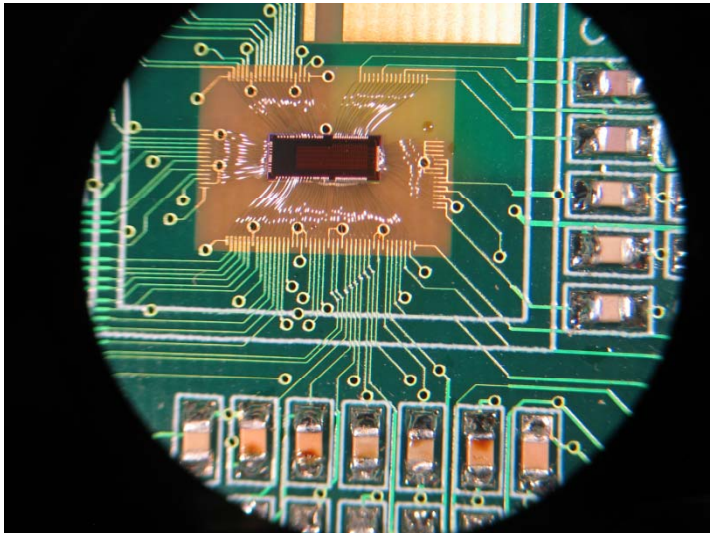

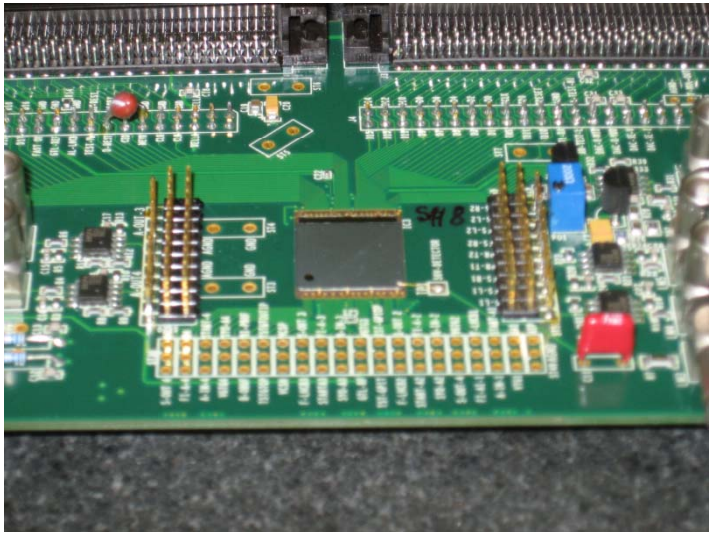

ToPix2
- 320 readout cells (100 µm)^2
- 5x2 mm^2 size
- analogue + digital circuit

Epi-pixel sensor
- bump bonded on ALICE FE
- thinned down to:
  - 100 µm (49 µm)
  - 120 µm (75 µm)
  - 150 µm (98 µm)

Strip Detector

rectangular sensor:
- double sided silicon strip sensor
- pitch: 130 µm (0.65 µm)
- size: 6.7 x 3.3 x 0.03 cm^3
- stereo angle 90°

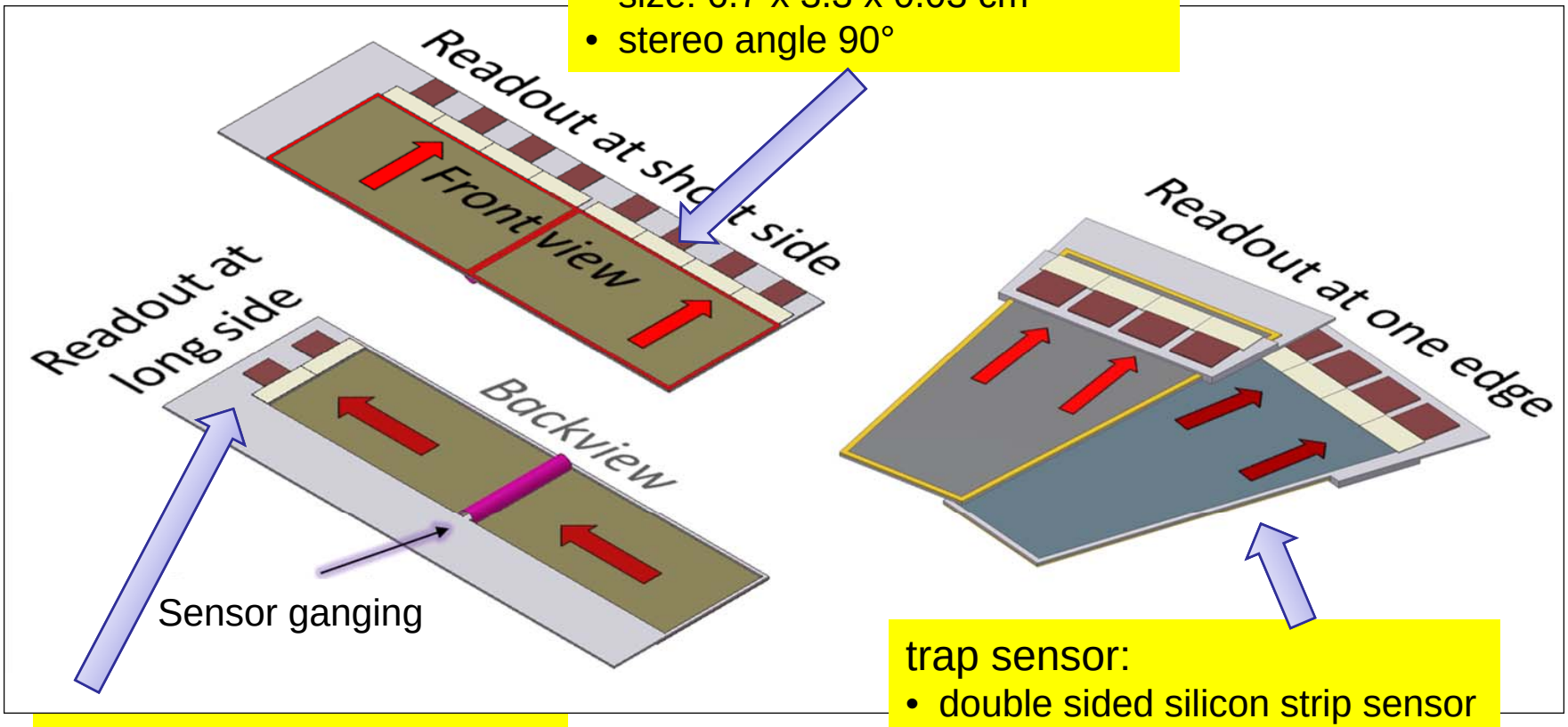

trap sensor:
- double sided silicon strip sensor
- pitch: 70 µm
- size: 6.1 x 3.5 x 0.03 cm^3 15°
- stereo angle 15°

front-end electronic:
- custom development together with GSI
- untriggered readout

Hardware development

First small sensor prototype with APV readout

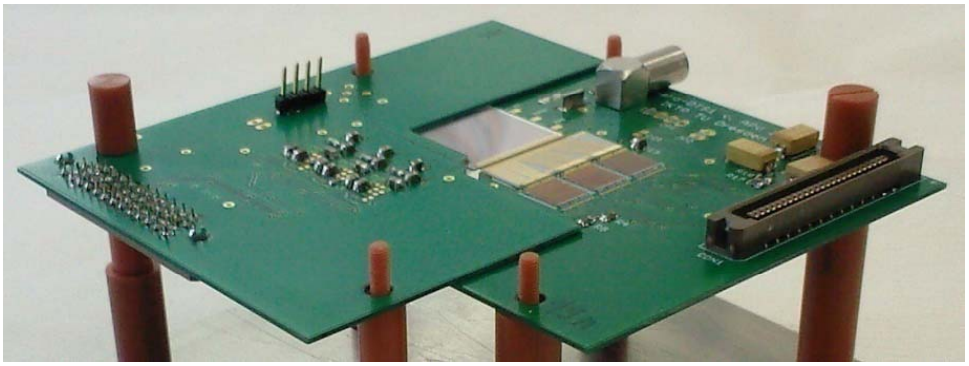

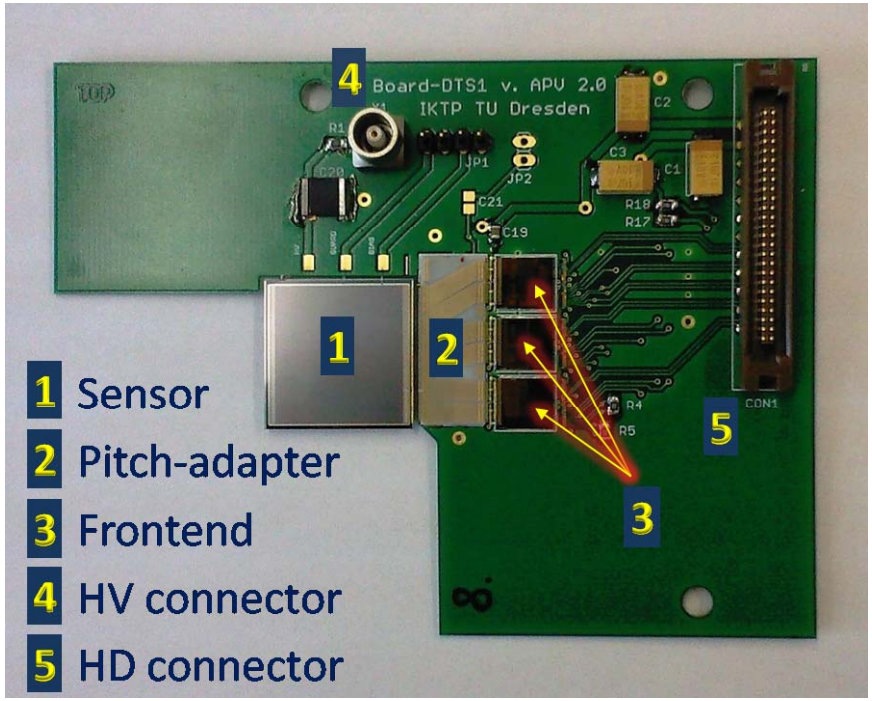

Pixel support structures

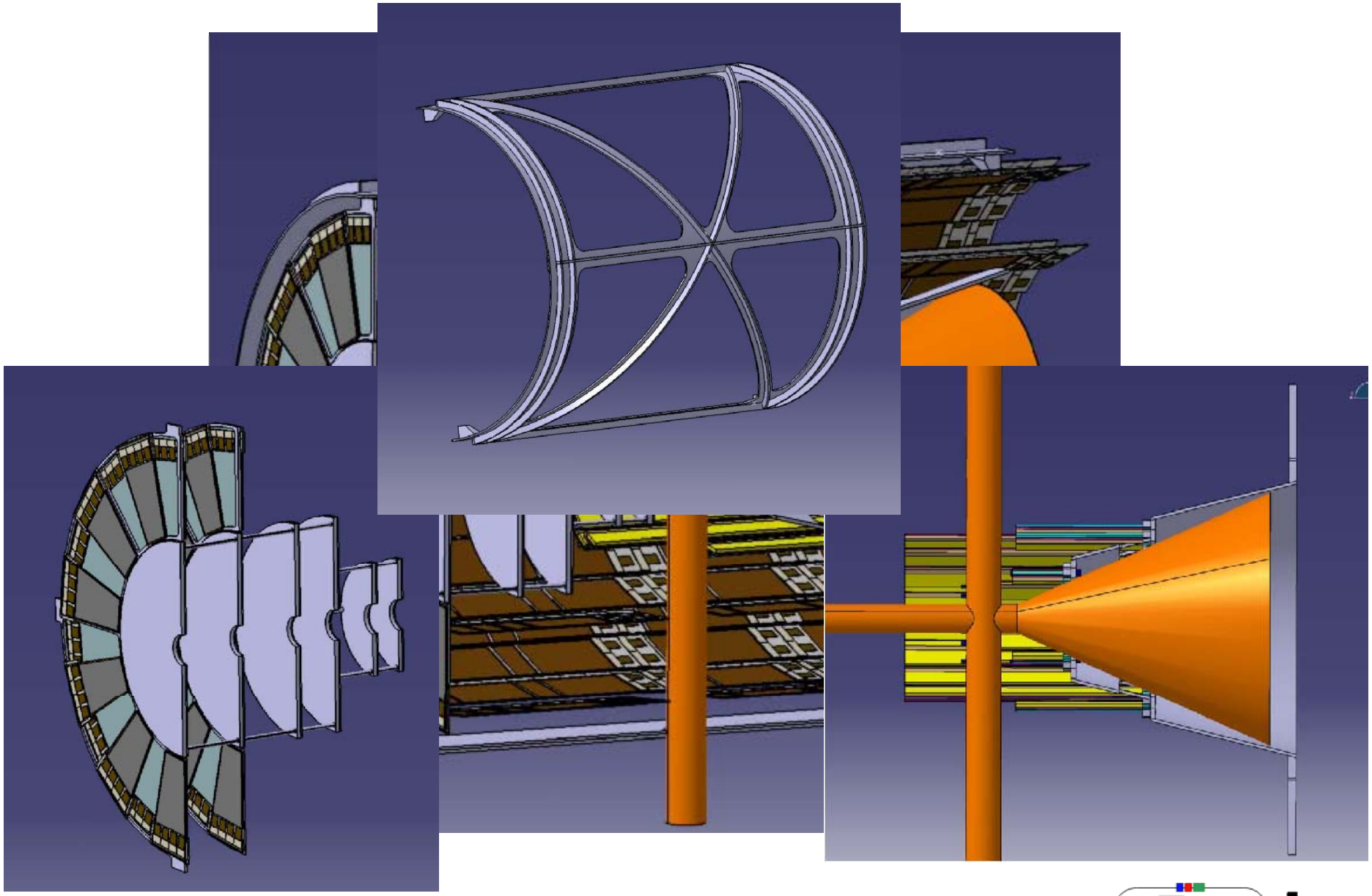

Support Structures Strips

- Strip barrel design

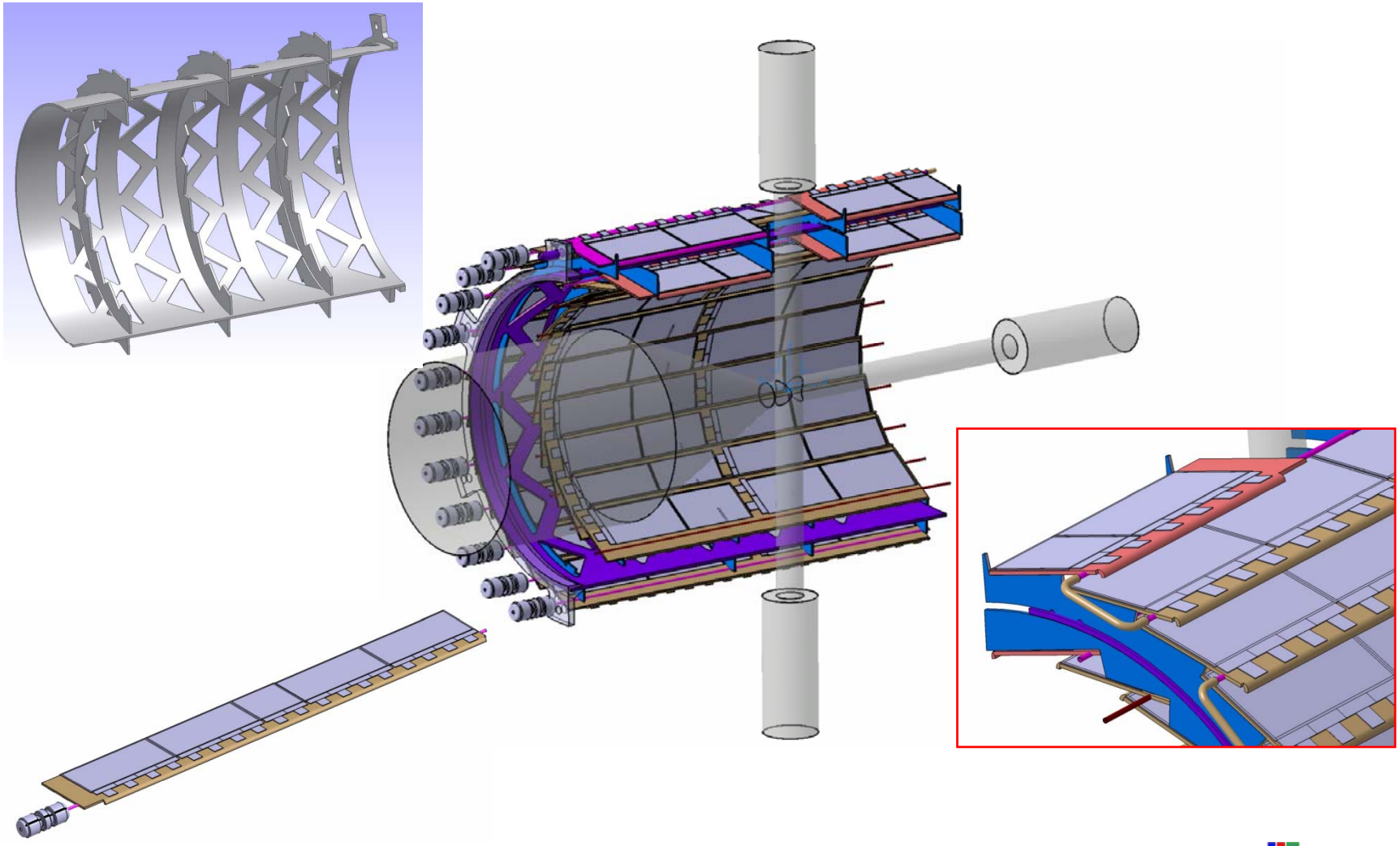

Concept for strip disks

Disk layer / Forward part

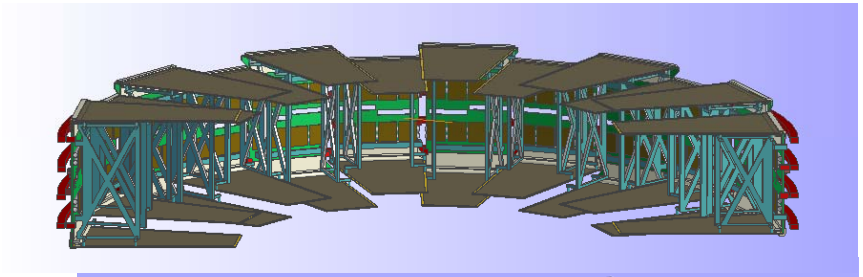

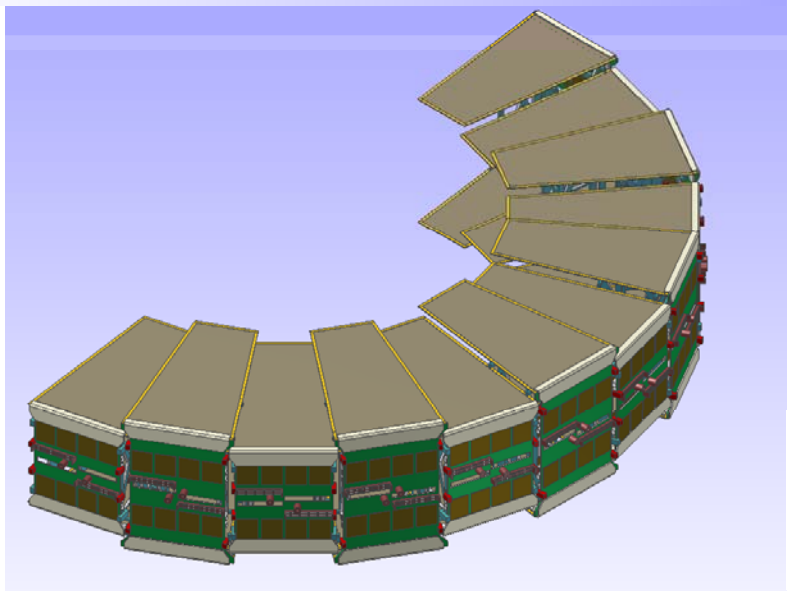

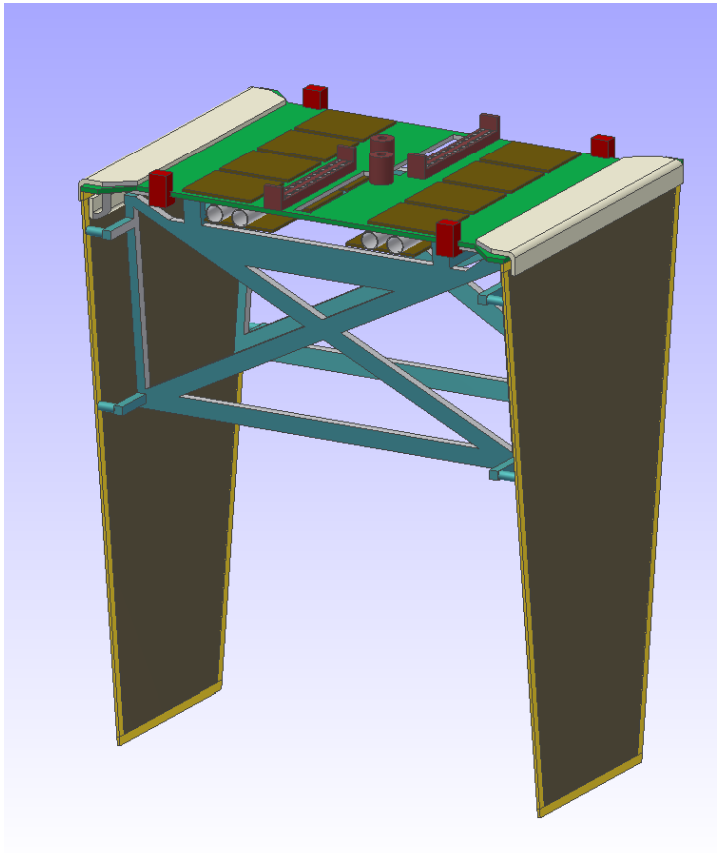

➔ *T. Würschig – HK 40.3*

Use of carbon sandwich structure

- Stave support: Sandwich structure
  (Carbon – Rohacell – Carbon)
- Barrel support: Half-shell and saw-tooth support
- Carbon foam with high thermal conductivity

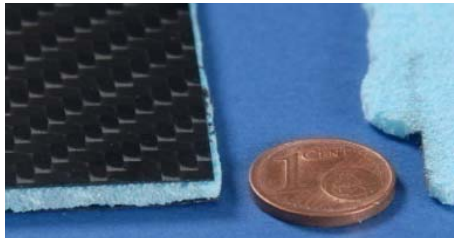

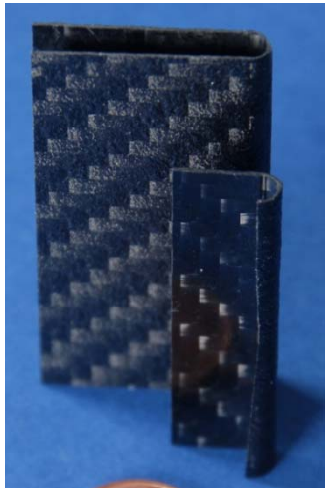

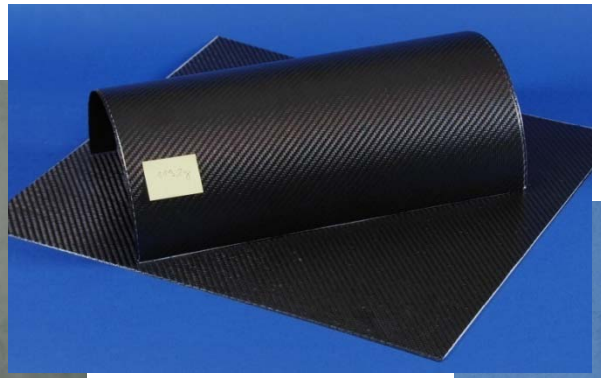

SIMULATION PROGRAM

Simulation Studies of Mechanical Design

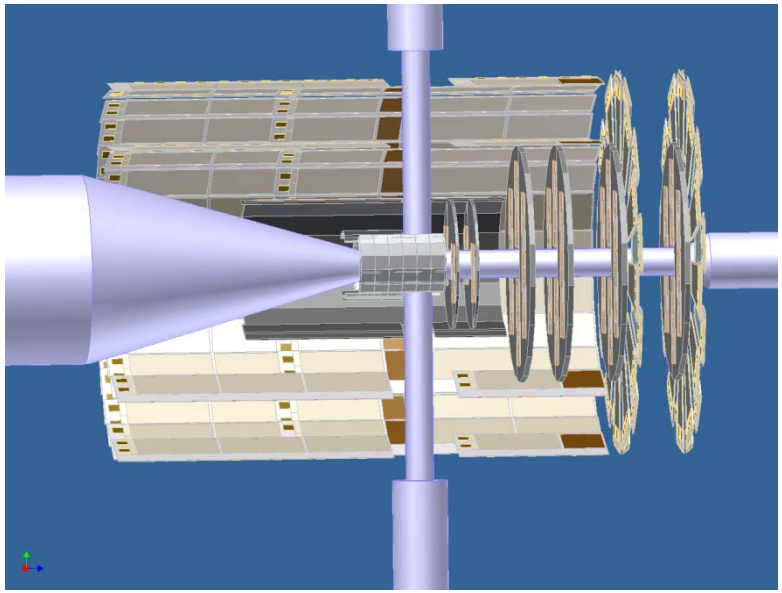

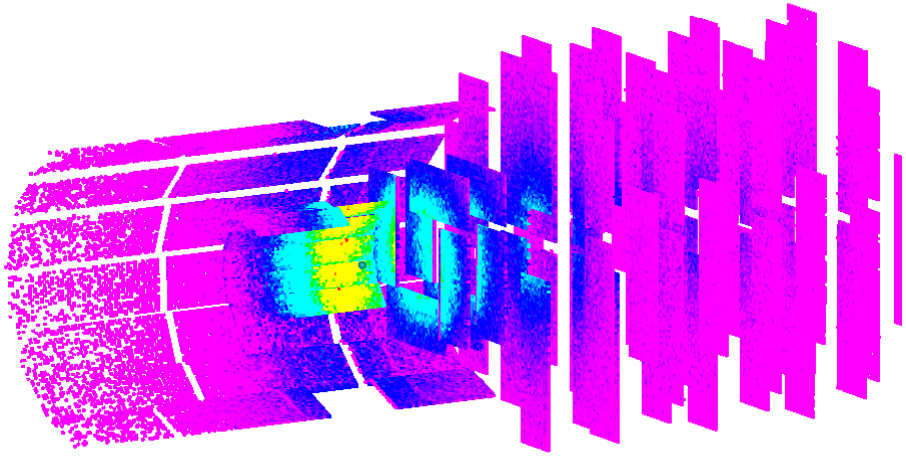

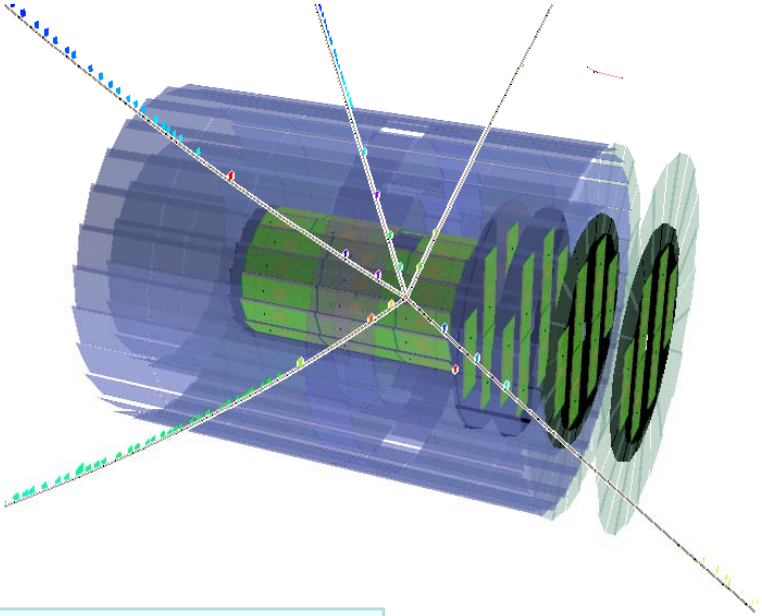

CAD Converter
translates CAD drawings (STEP-files) into ROOT geometries ➔ access to full pandaROOT simulation with realistic detector design

➔ *T. Würschig – HK 40.3*

Performance of MVD

Momentum resolution of PANDA detector with and without MVD

1 GeV/c pions

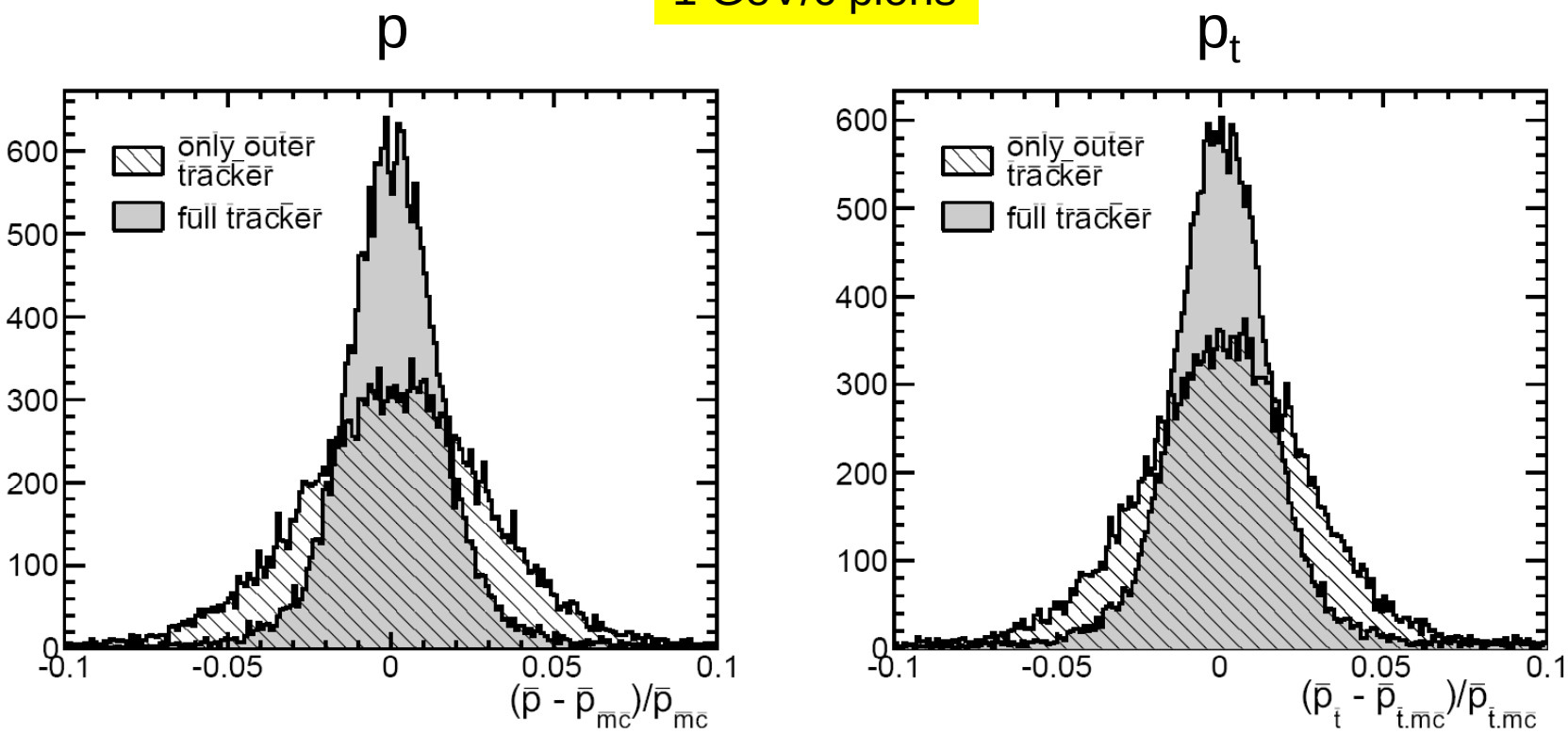

R. Jäkel PhD thesis in preparation

$\sigma(p)$ [1GeV/c π] without MVD = 2.6 %
$\sigma(p)$ [1GeV/c π] with MVD = 1.4 %

➔*R. Jäkel – HK 25.7*

Performance of MVD

Track parameter resolution with and without MVD

1 GeV/c pions

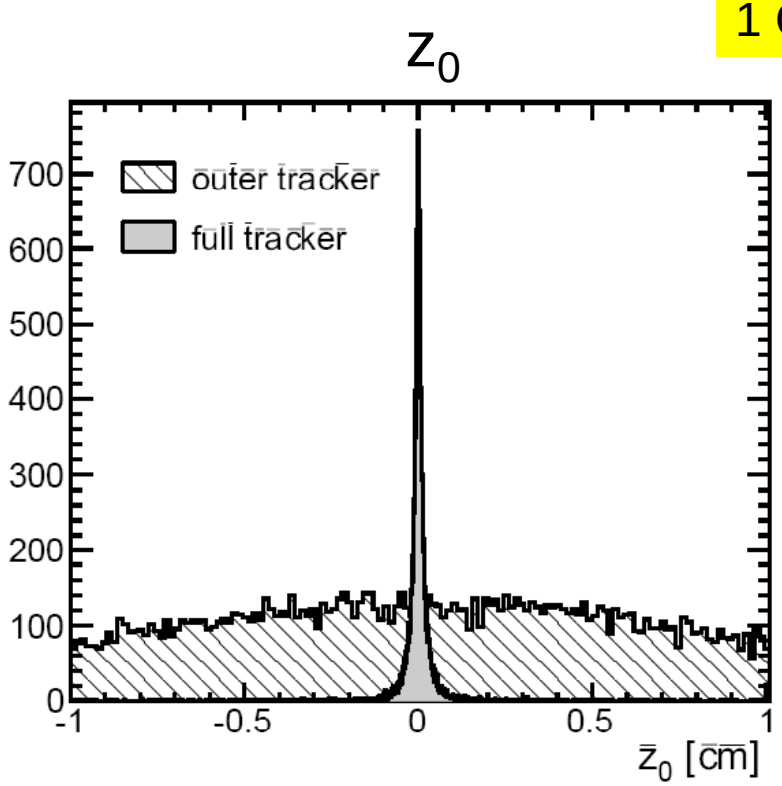

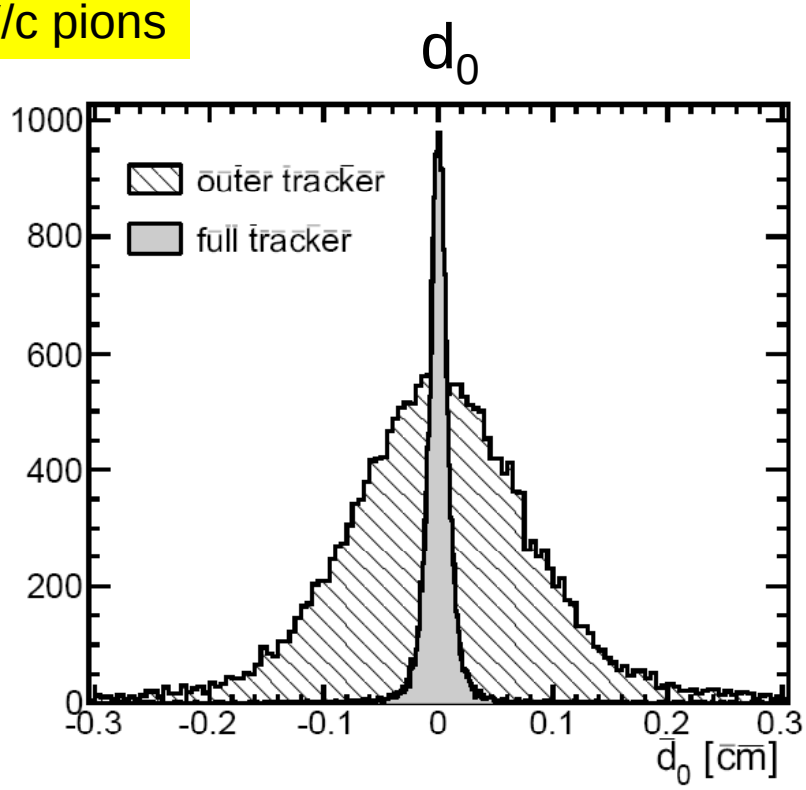

R. Jäkel PhD thesis in preparation

Secondary vertex resolution

pp → D^+D^-

R. Jäkel PhD thesis in preparation

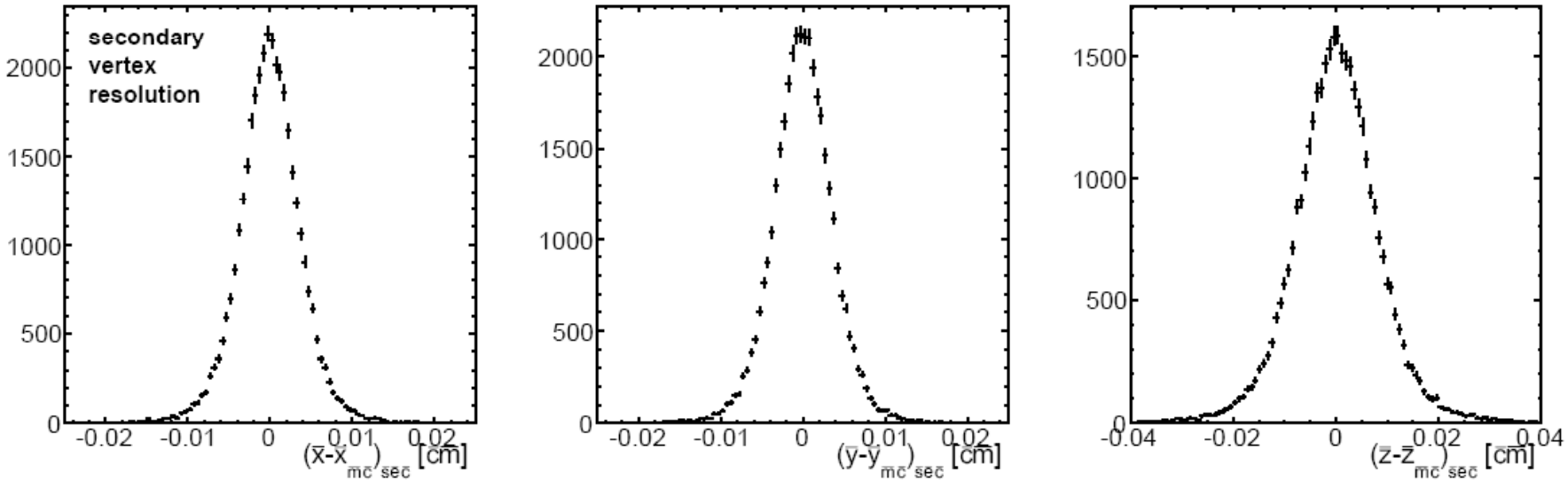

- Fully reconstructed D^+D^- pairs
- Vertex resolution:
  - 35 µm in x and y
  - 77 µm in z (at 6.57 GeV/c beam momentum)

TEST SYSTEMS

Lab-Testsystem

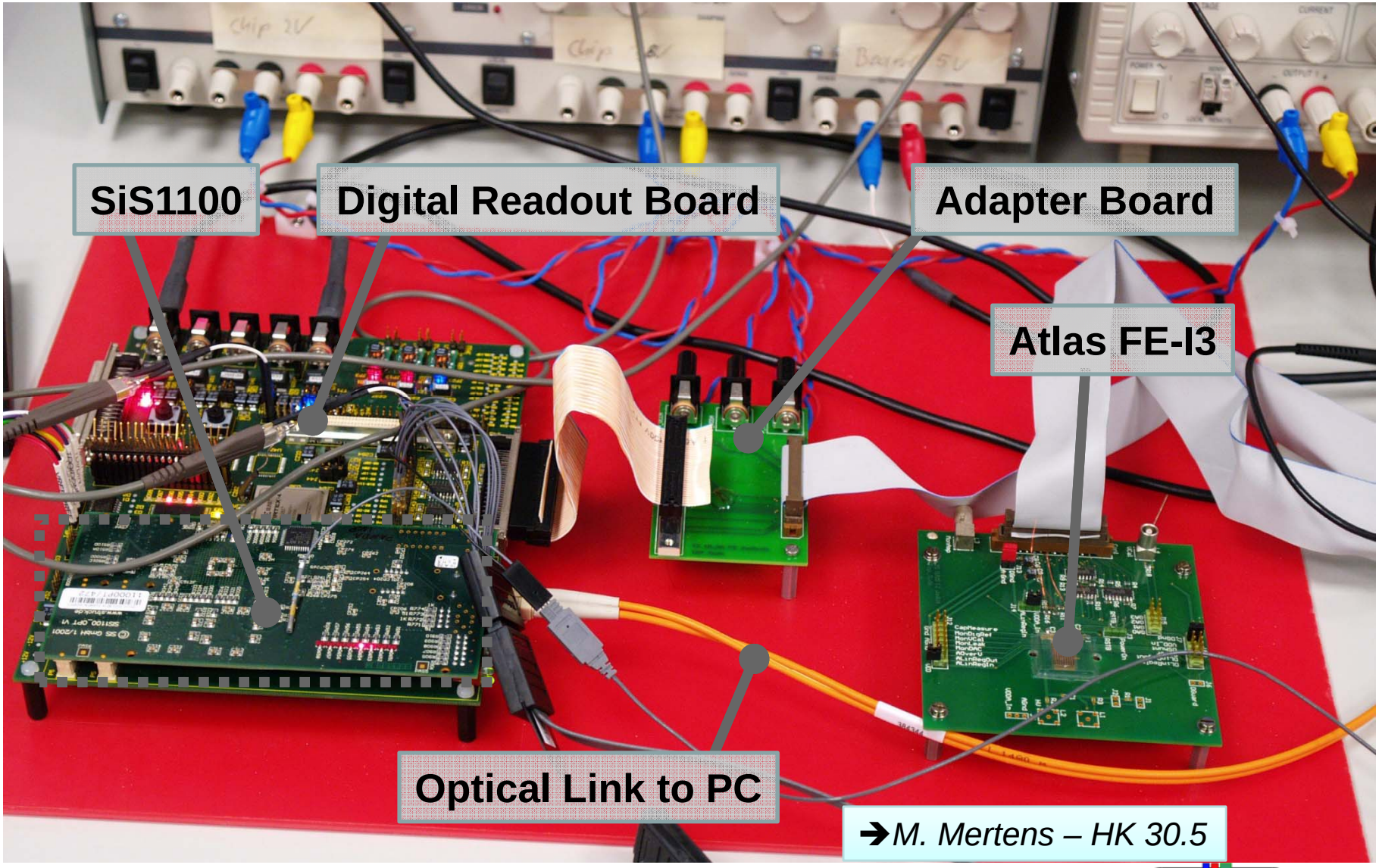

➔*M. Mertens – HK 30.5*

FE-I3: Threshold and Noise

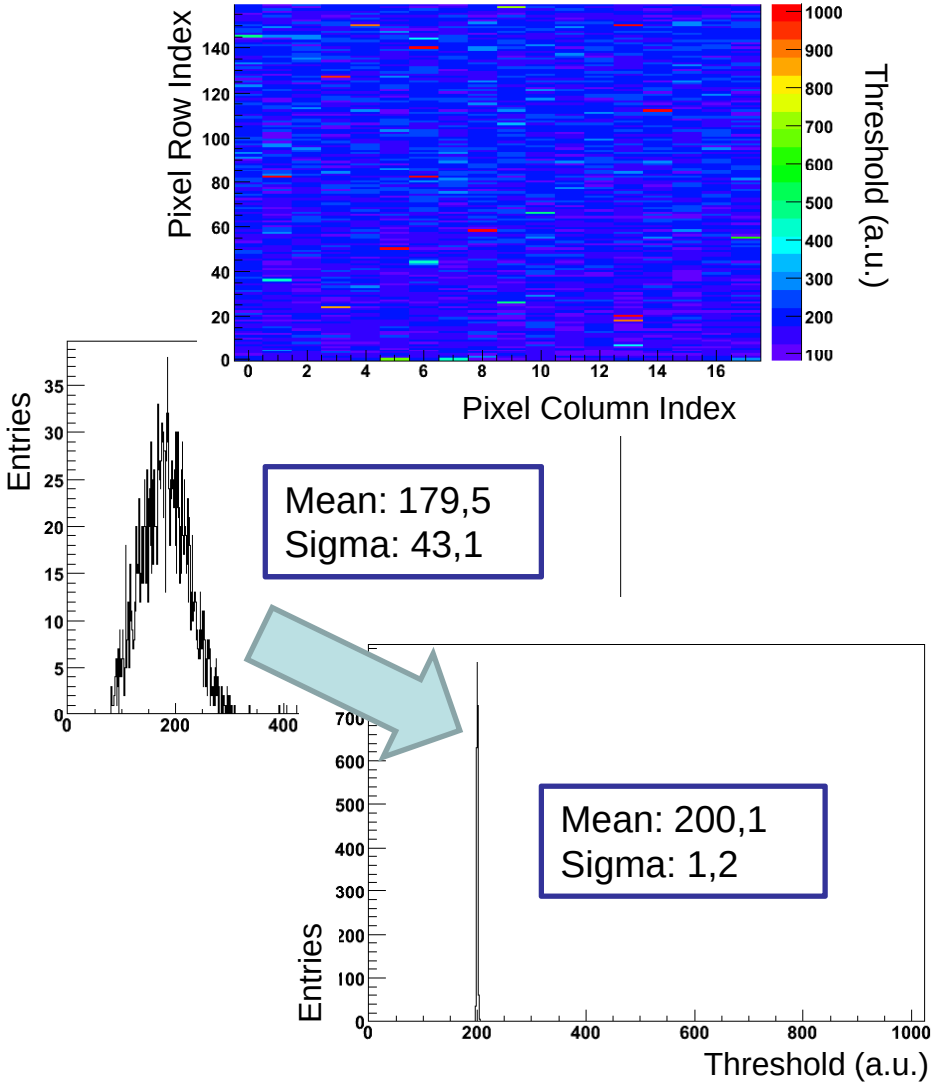

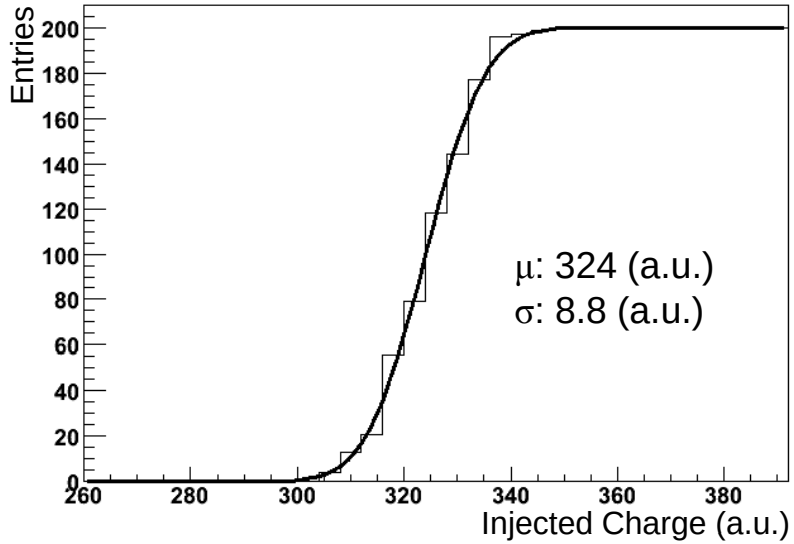

Threshold ⇔ TDAC Dependency

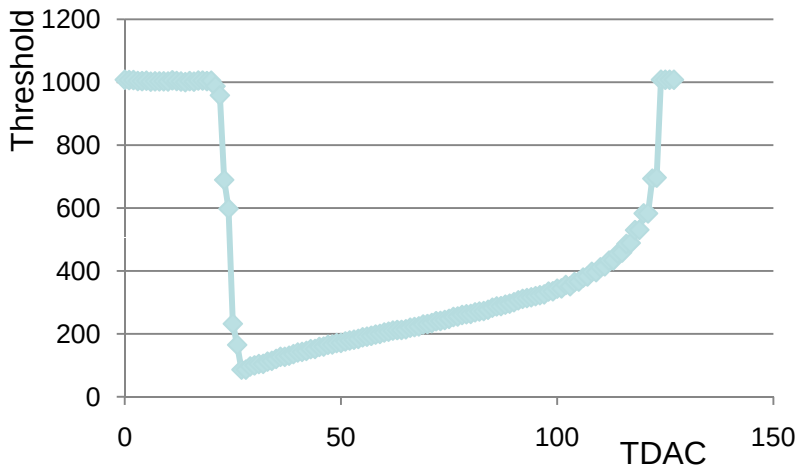

Strip Test Station Bonn/Dresden

Test station: DTS1 (Lab setup)

- Evaluation of silicon strip sensors
- Modular setup allowing further prototype testing

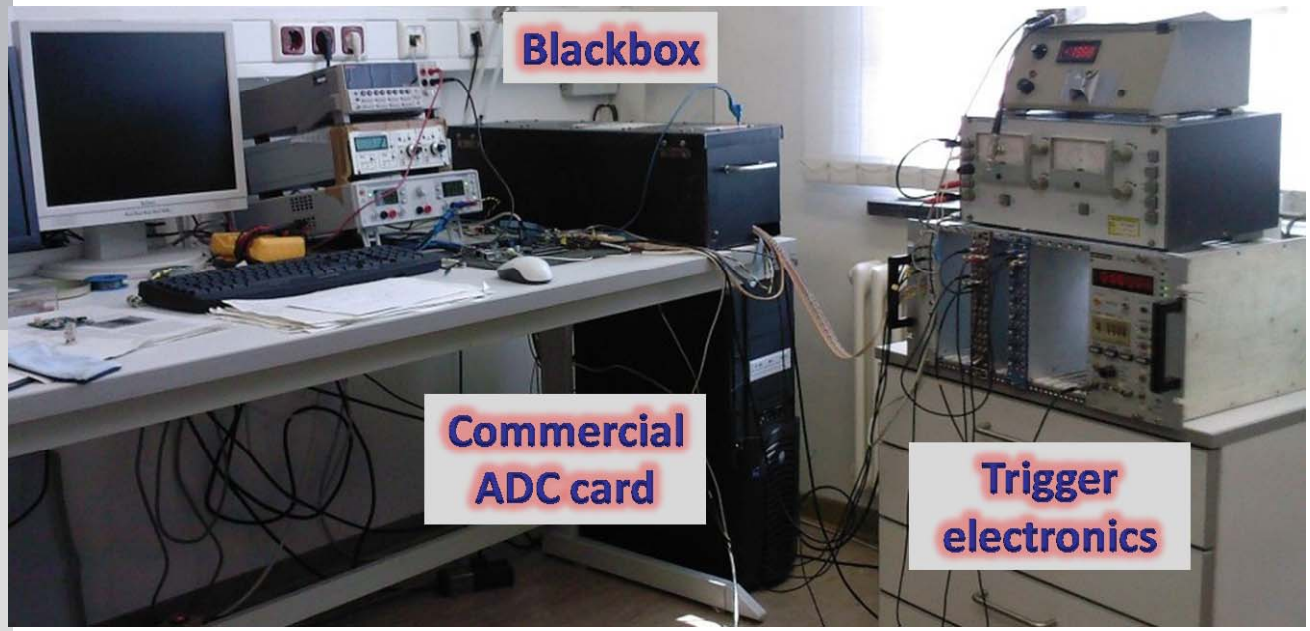

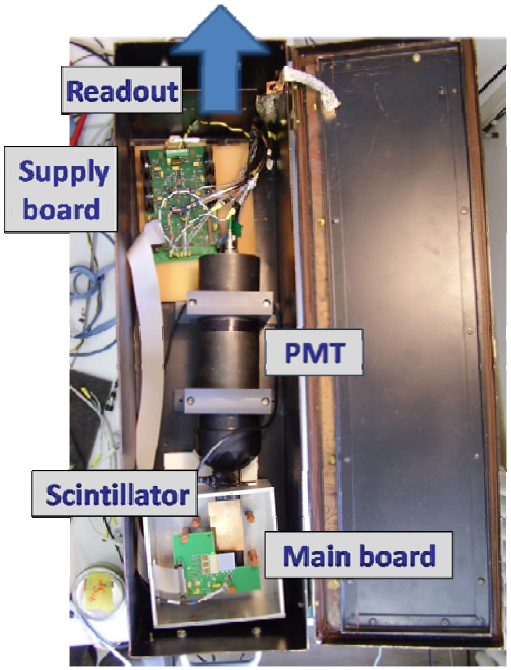

➔*F. Krüger – HK 40.4*

Beam Telescope Bonn

Test-beam setup in Bonn

Summary

- The Micro-Vertex-Detector is one of the most challenging subdetectors within PANDA
- It faces the highest radiation load, highest hit rates, very stringent requirements on the radiation length and by far the highest number of readout channels
- In the course of the PANDA project a very sophisticated simulation software was (and is still) developed which allows us to optimize all different design parameters of the detector and do realistic simulations of the physics performance
- The hardware development is on a good track and we think that we have the necessary technologies at hand which allows us to build this detector. Nevertheless there is still a lot of work ahead of us