Mirror Positioning Control System
CBM Experiment

Beckhoff Motor control system and EPICS

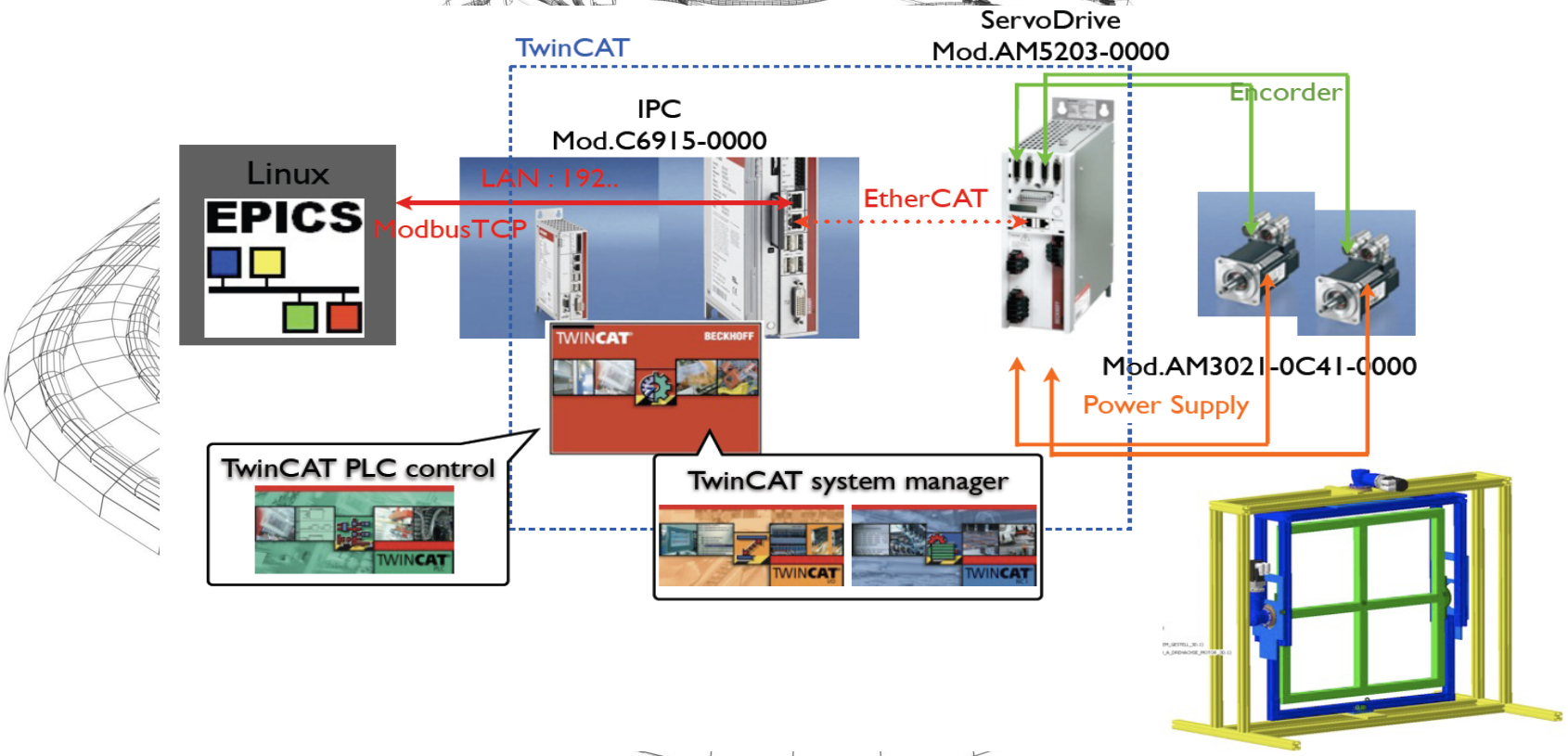

Introduction and motivation

Introduction

- A part of the CBM experiment is the RICH detector.
- To check the uniformity of the 16 MAPMTs.
- A frame with four mirrors as a concave reflector was designed
- Control system for positioning this mirror frame.

Motivation

- Experiences with other motor control systems made for the TASCA experiment.
- Personal motivation and test the communication between a Beckhoff system and EPICS.
- Request from the CBM group.
- Control system easy to handle.
- Summer Student Project.

System requirements and components

System requirements:

- The mirrors and the frame have a weight of approximately 20 kg. The motors should be able to manage this weight.
- The mirror frame should be move in two directions: vertical ±2° and horizontal ±2° and 90°
- The motor movement should be precise, 0.01° accuracy was required.
- The control system should allow to move the frame to previous defined positions but also to choose new positions.

System Components

- Servomotors with absolute encoder.
- Planetary gear units for servomotors
- Digital Servo drive
- Control cabinet PC
- Connection cables
- TwinCAT NC PTP (software)
- TwinCAT Modbus TCP Server (software)

System components hardware (planed)

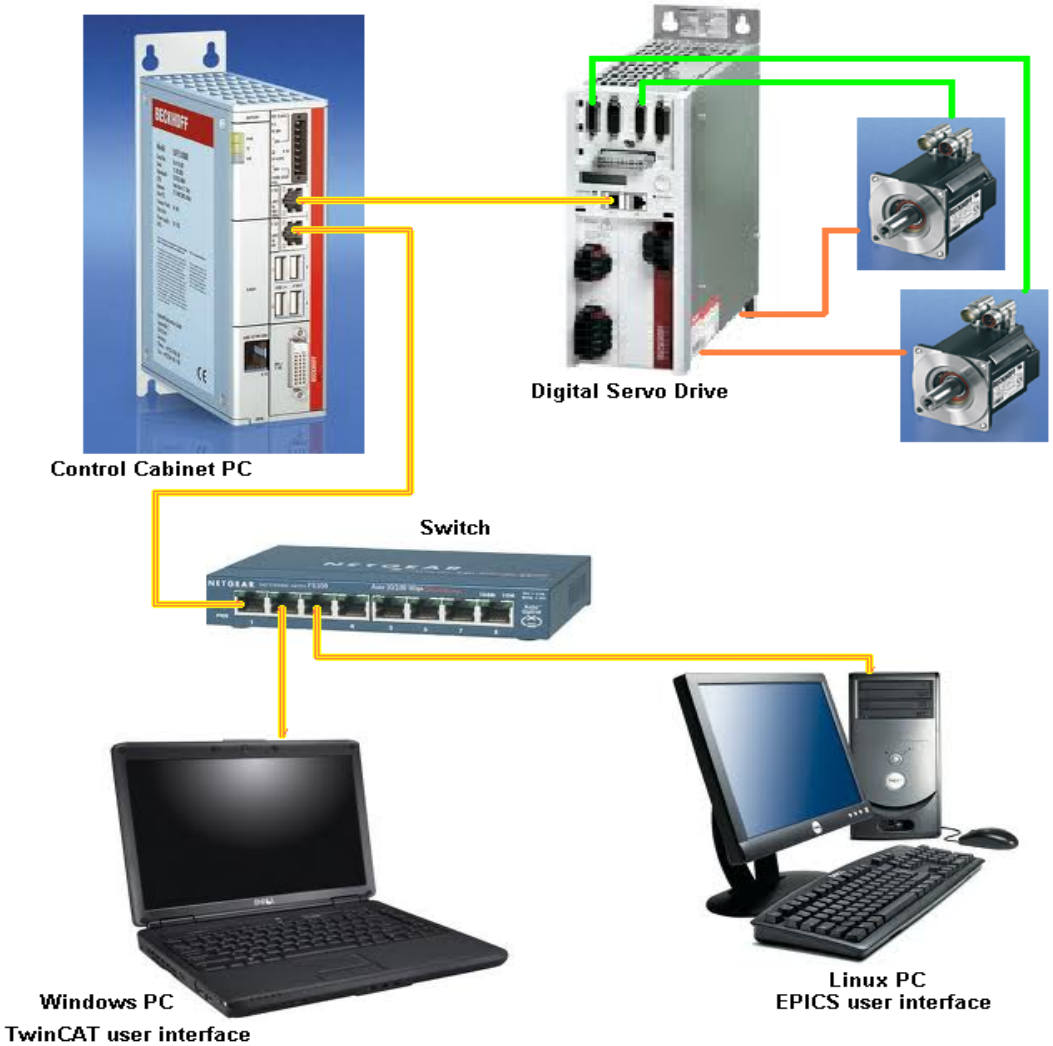

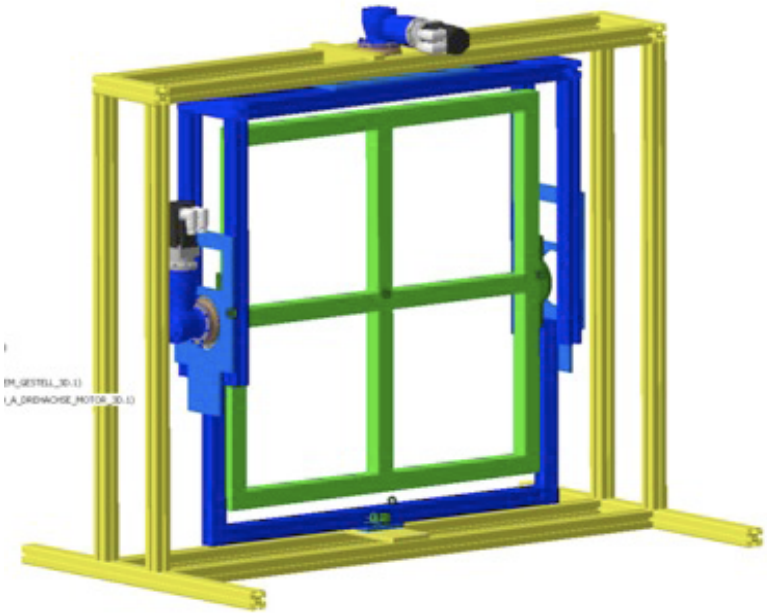

System components (Picture from Jihye Song)

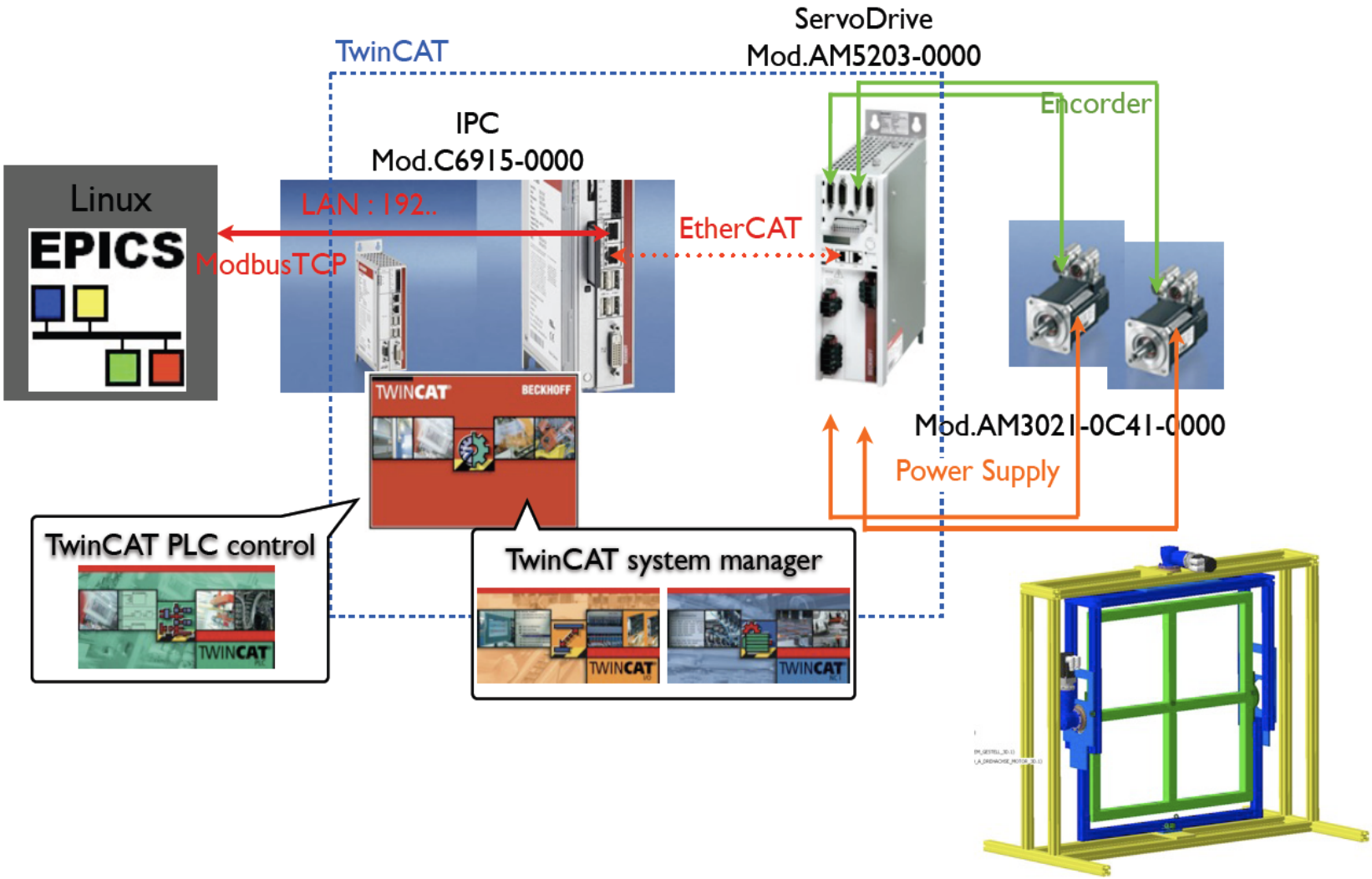

Control Panel (Jihye Song)

TwinCAT Control Panel

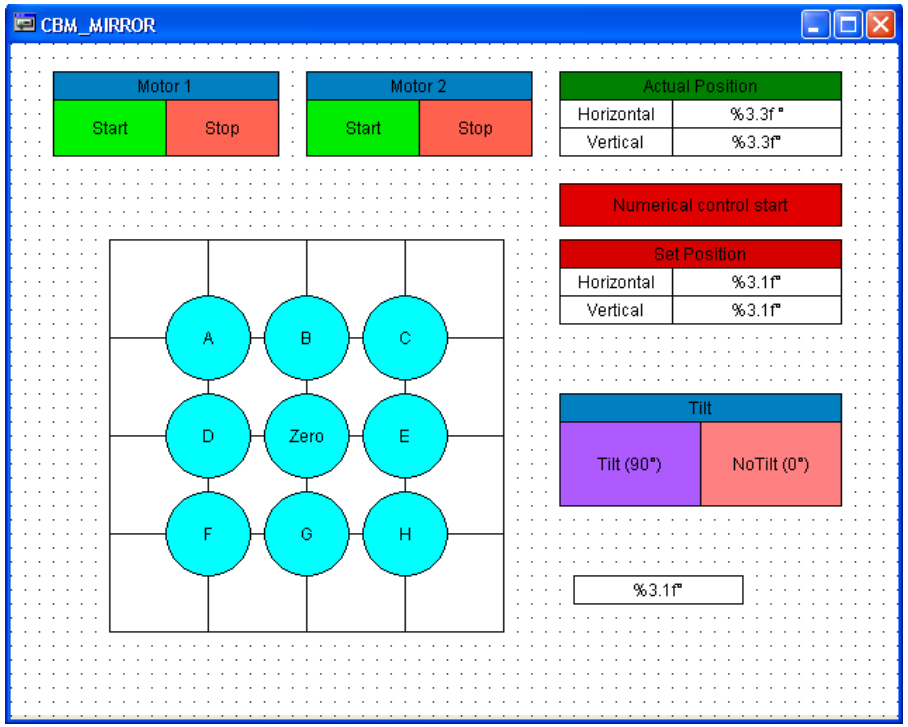

EPICS Control Panel

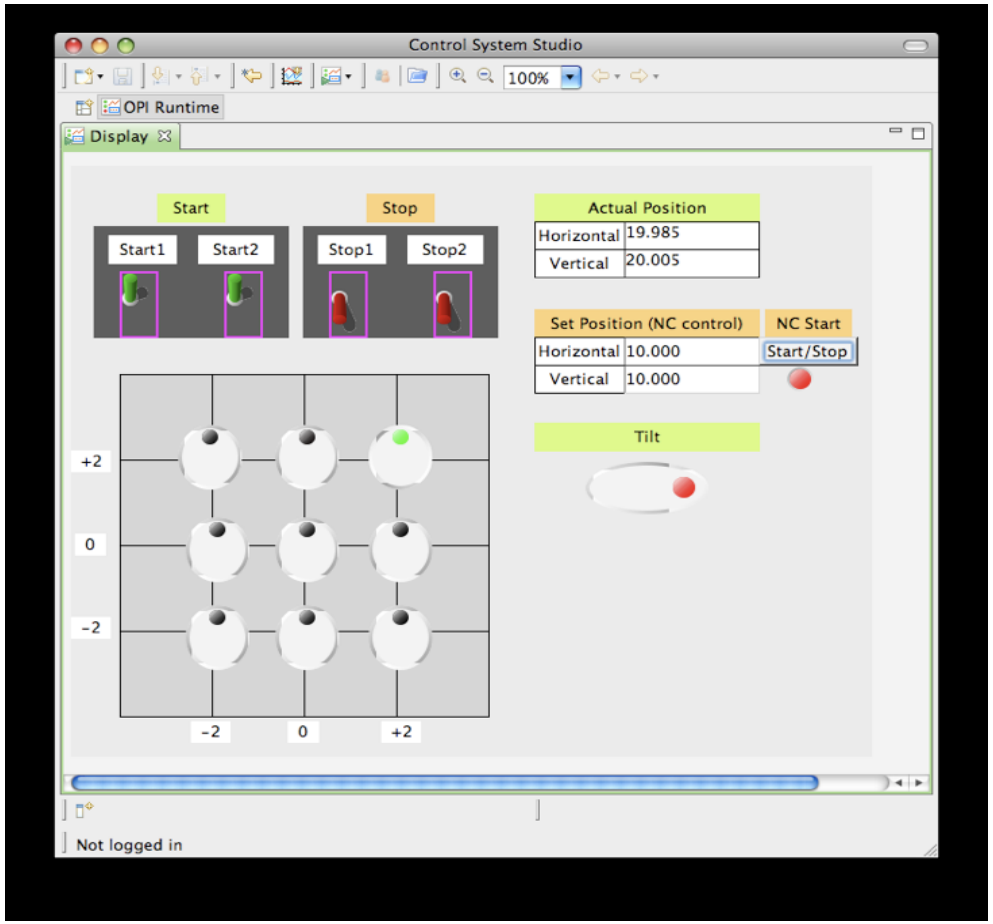

CERN Beam time – System configuration working conditions

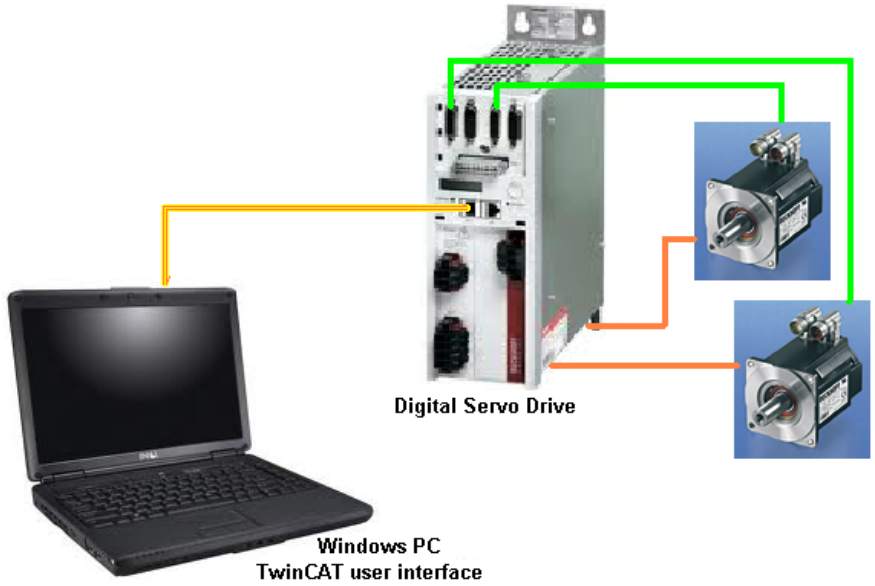

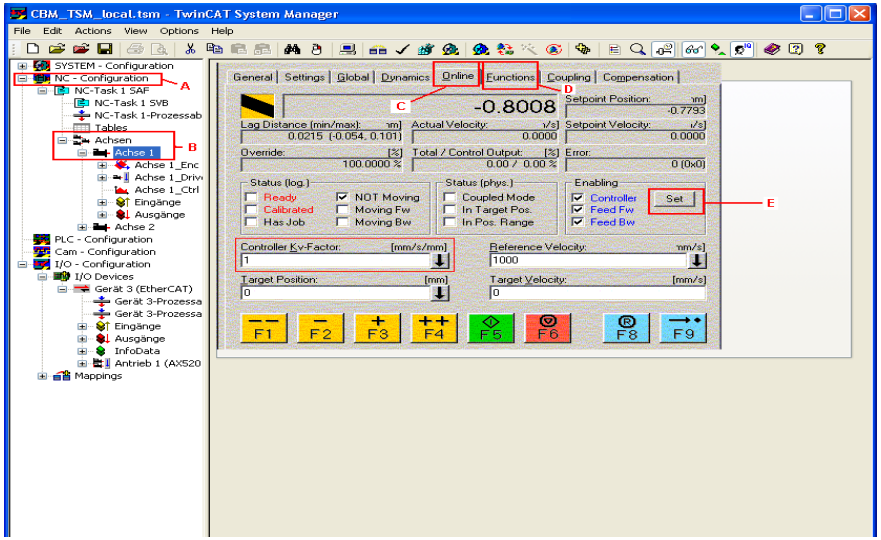

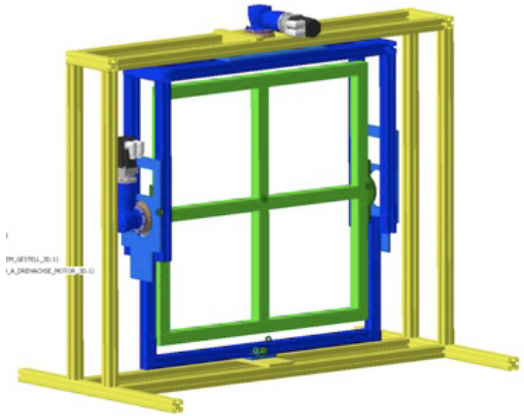

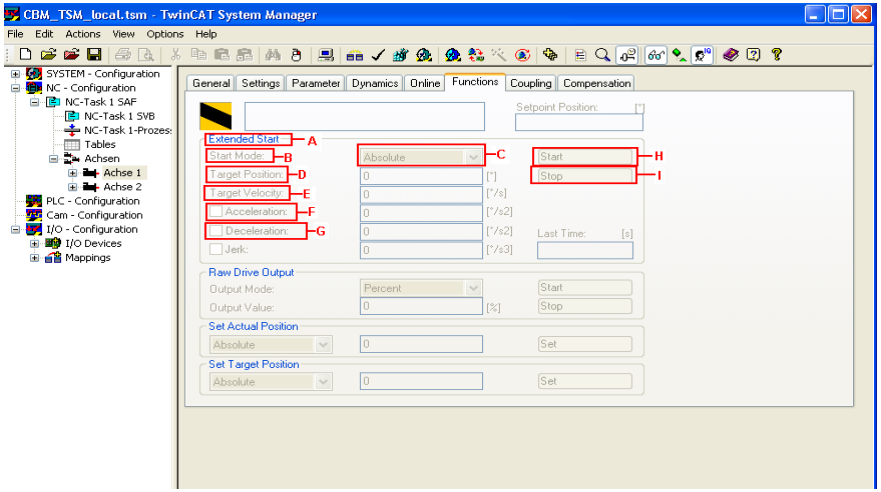

Summary: trouble, solutions, advantages, suggestions.

Issues:

- Not enough time to test the system.
- The system was never tested at the real working conditions (the final assembly was made on CERN).
- Not enough time to test and to become familiar with the user interface.
- Some misunderstandings and calculation errors by the mirror position values

Solutions and suggestions:

- System test at real working conditions.
- New test from the user interface or maybe a redesign.
- Hand operation component to be use during the assembly.

Advantages:

- Different kinds of configurations are allow (TwinCAT or EPICS).
- The system flexibility allows to implement emergency solutions to get the system running.

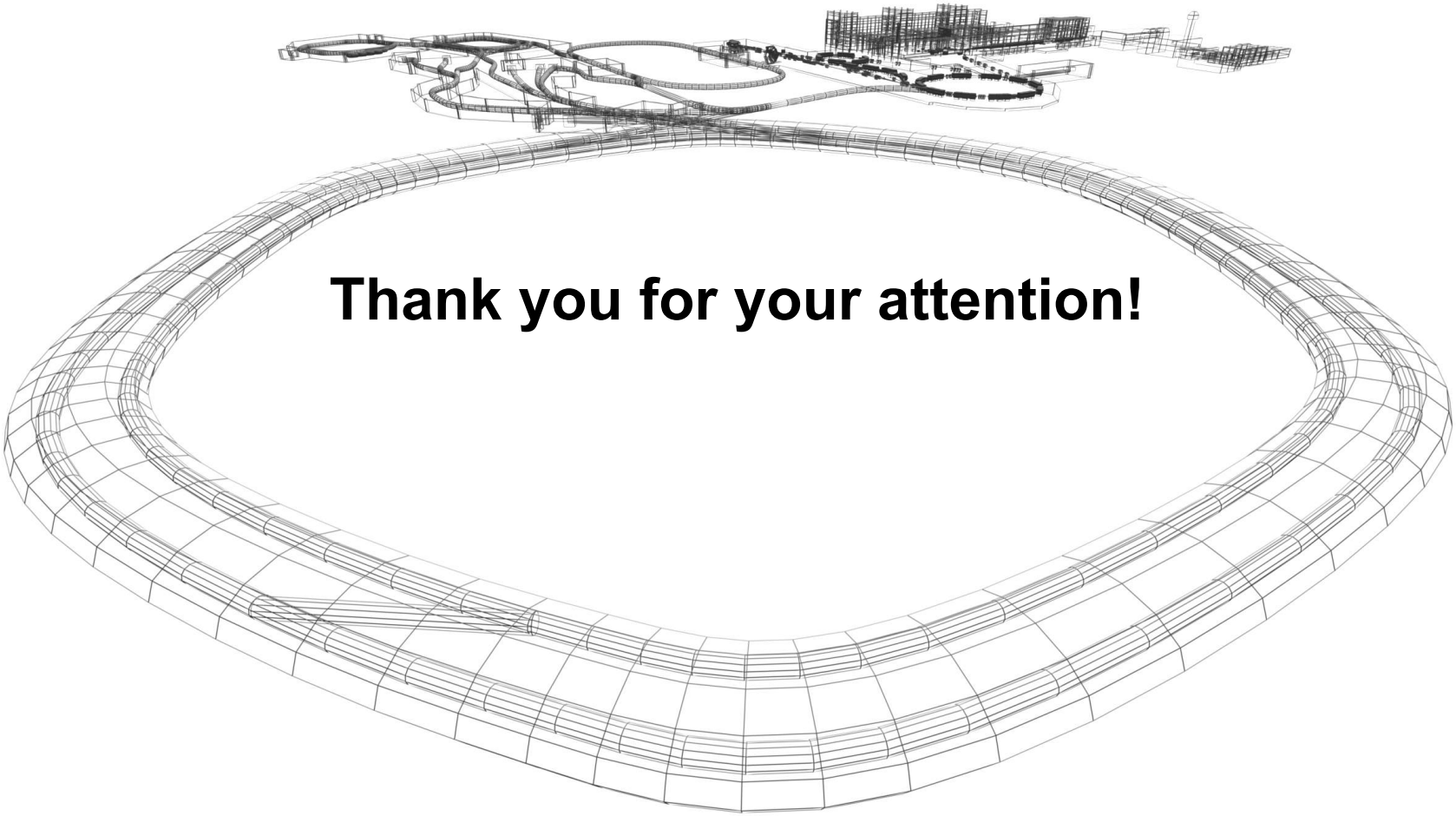

Thank you for your attention!